How can we design homes for extreme climate conditions on Mars?

Climate Comparison

⬜ POLAR
🟩 TROPICAL
🟩 TEMPERATE
🟧 MEDITERRANEAN
🟨 ARID

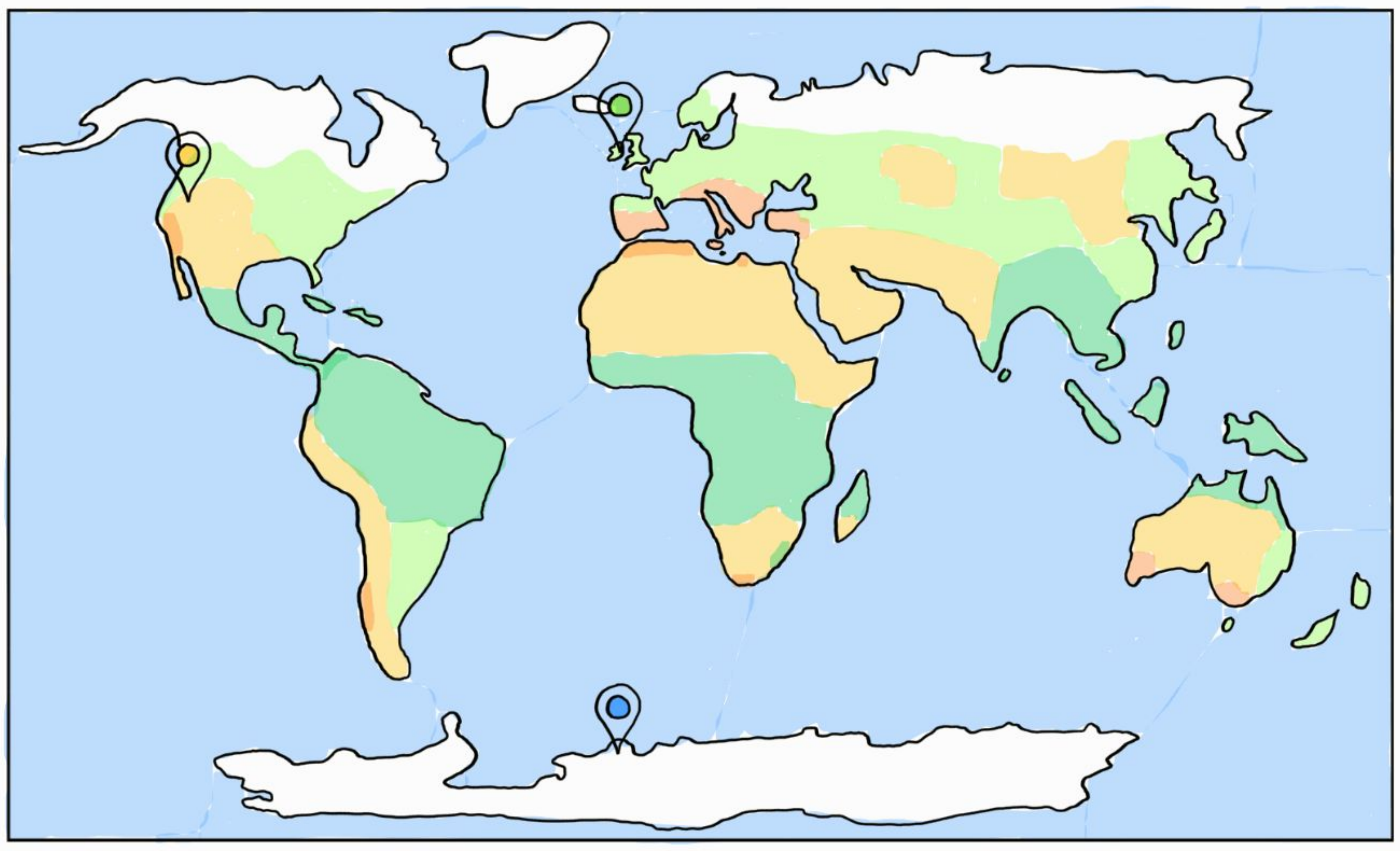

📍 HALLEY VI, ANTARCTICA
📍 OSOYOOS DESERT, CANADA
📍 DUBLIN

Dublin, Ireland

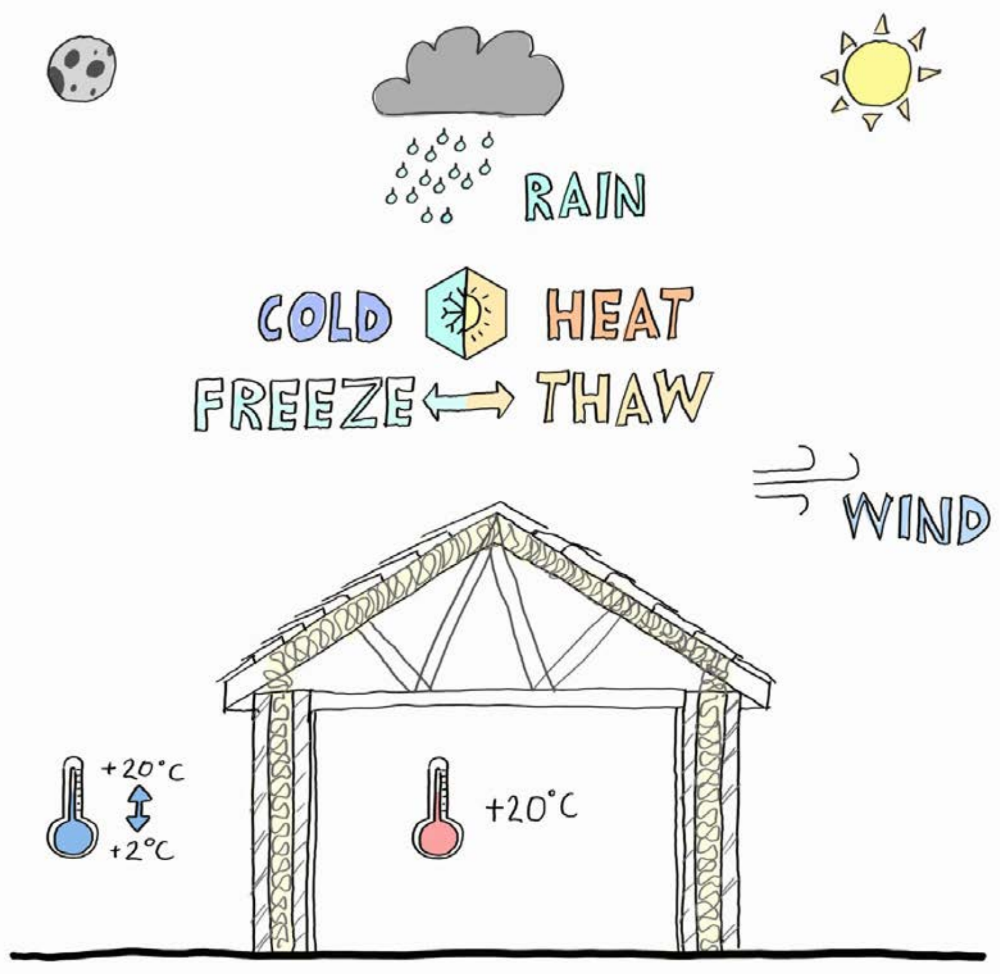

- Temperate temperatures all year round.
- External materials endure freeze thaw action from absorbing rain water and freezing during cold nights expanding the materials.
- The building drains rainfall appropriately reducing the risk of water ingress.
- Winds can exceed 150 kmh during occasional winter storms.

Halley VI, Antarctica

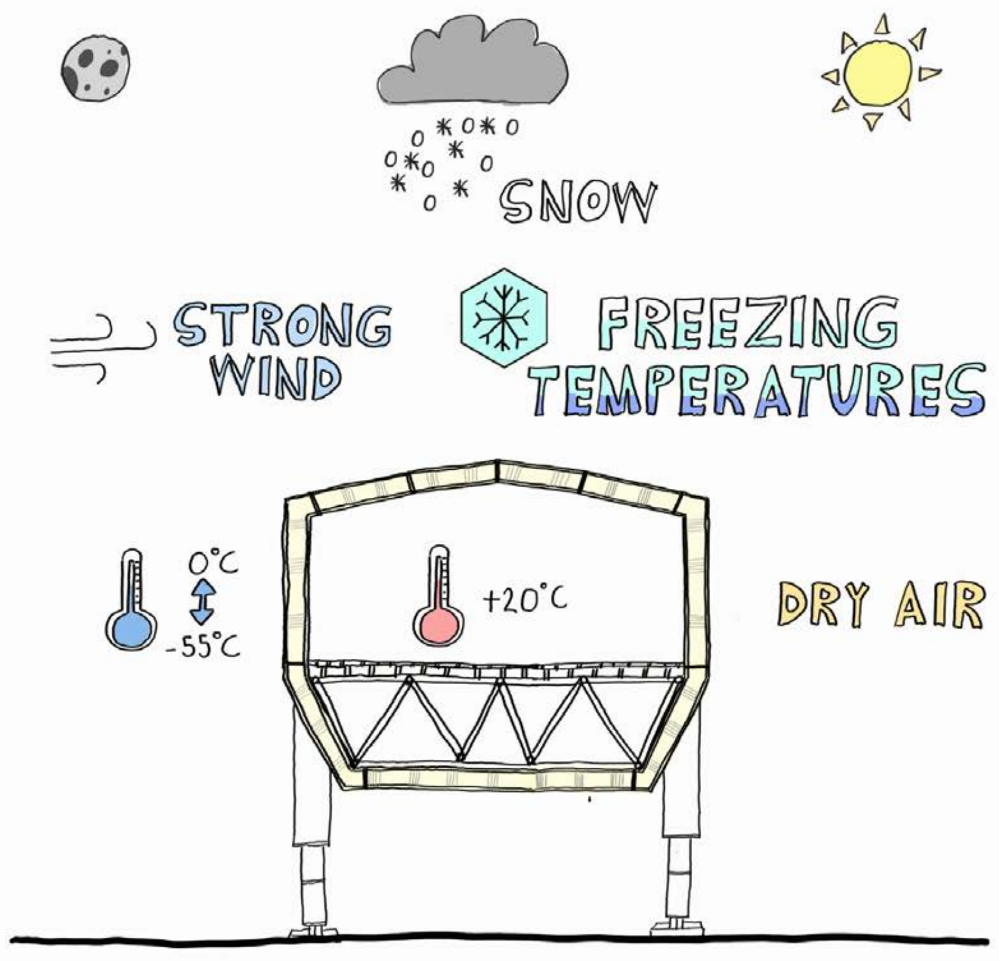

- The building endures freezing temperatures all year round.
- Antarctica receives 1.2 m of snow every year. The building raises itself above the snowdrift once a year to avoid getting buried, like the previous Halley research stations.
- The building is oriented perpendicular to the strong winds. The aerodynamic form of the building allows the winds to blow over and under the modules.
- The air is dry in Antarctica because of the freezing temperatures. This means no water can get into the panel joints and expand into ice.

Osoyoos Desert, Canada

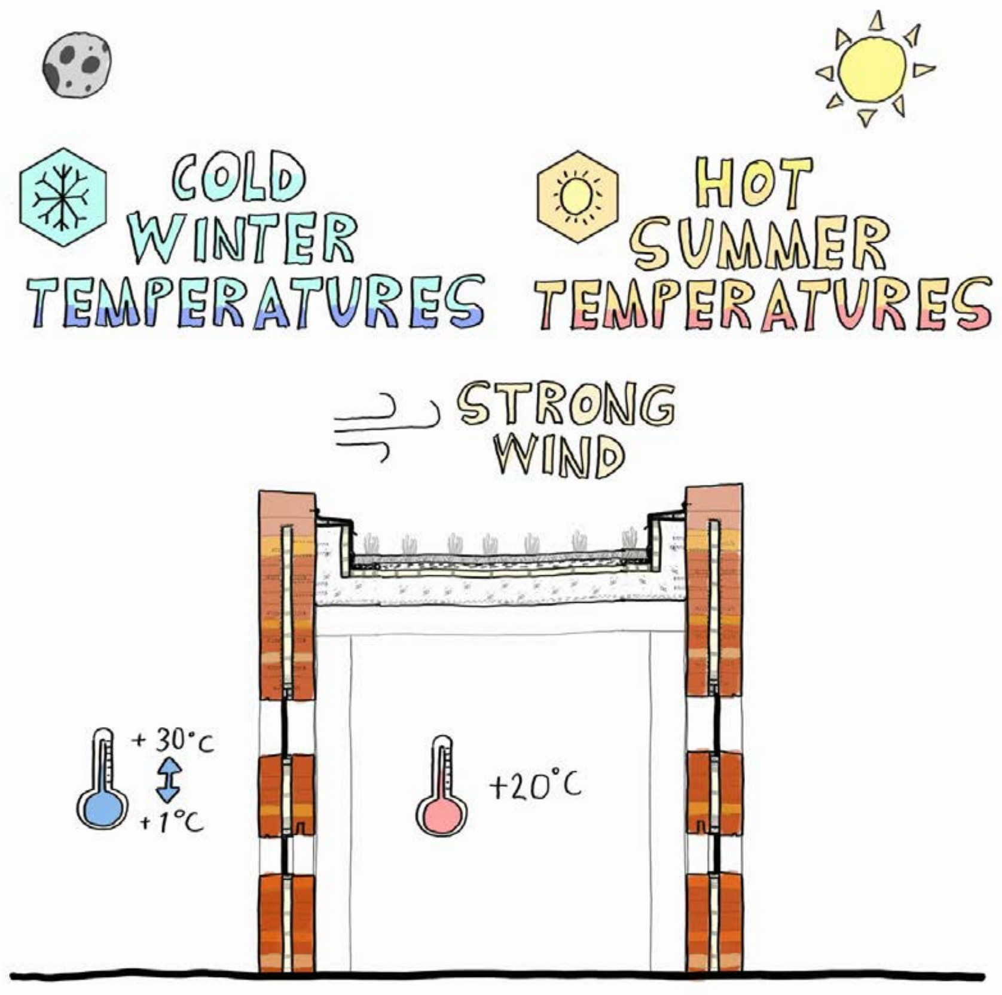

- The building endures extreme heat during the summer and freezing temperatures in the winter.
- An occasional heavy downpour of rain is drained appropriately from the building.
- Occasional windstorms can sweep across the building that are powerful enough to uproot trees.
- Snow blizzards can occur during the winter, which the green roof accommodates the load of.

Mars

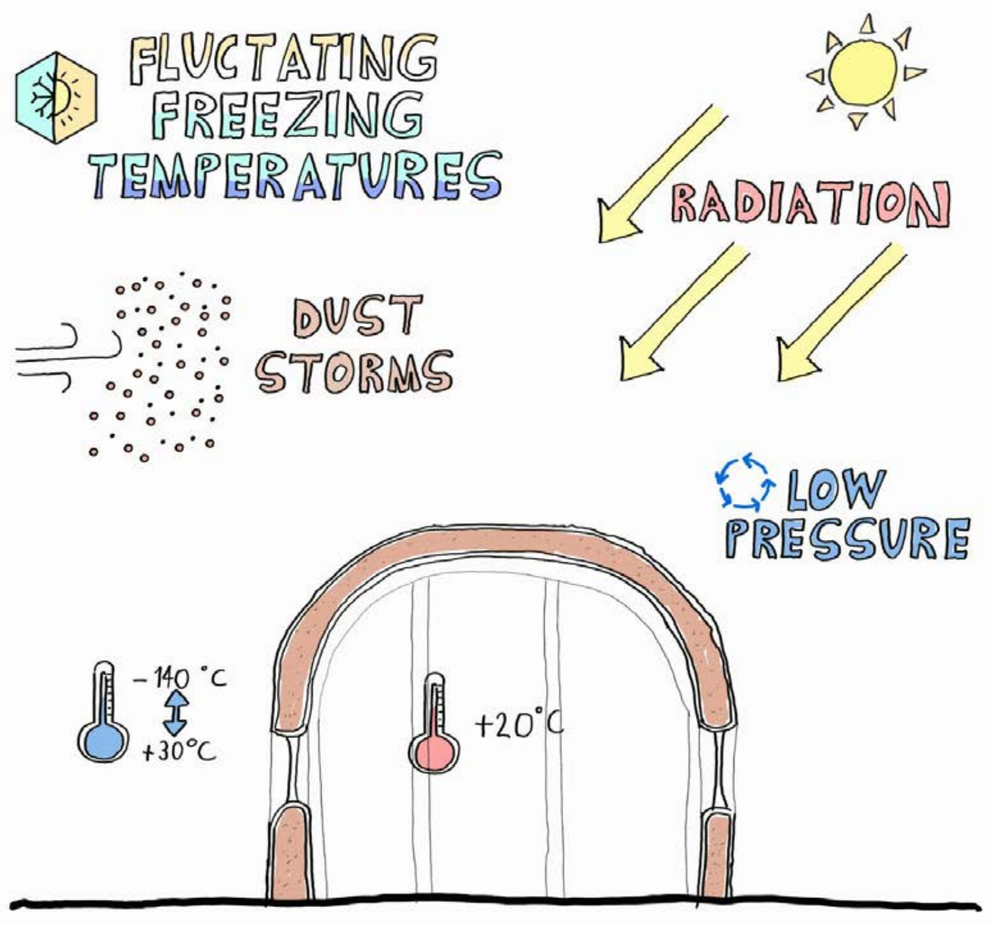

- The building will endure fluctuating freezing temperatures all year round whilst maintaining a constant indoor temperature of 20 degrees.
- Dust storm winds will batter the external surface of the building with fine Martian dust and build up around the building.
- The external fabric of the building must protect the inhabitants from the deadly high levels of radiation from the sun due to the lack of an ozone layer around the planet.
- The buildings fabric will need to be able to "flex" because of the dramatic pressure difference between the inside and the outside.

Weather Data (27/02/2021)

	Dublin	Halley VI	Osoyoos	Mars
Temperature (°C)	11	-7	7	(-13) - (-73)
Pressure (hPa)	1041	981	1010	8
Wind Speed (kph)	6	14	4	14
Wind Direction	SW	E	NW	-
Maximum Gust (kph)	-	16	-	-
Humidity (%)	64	95	88	-

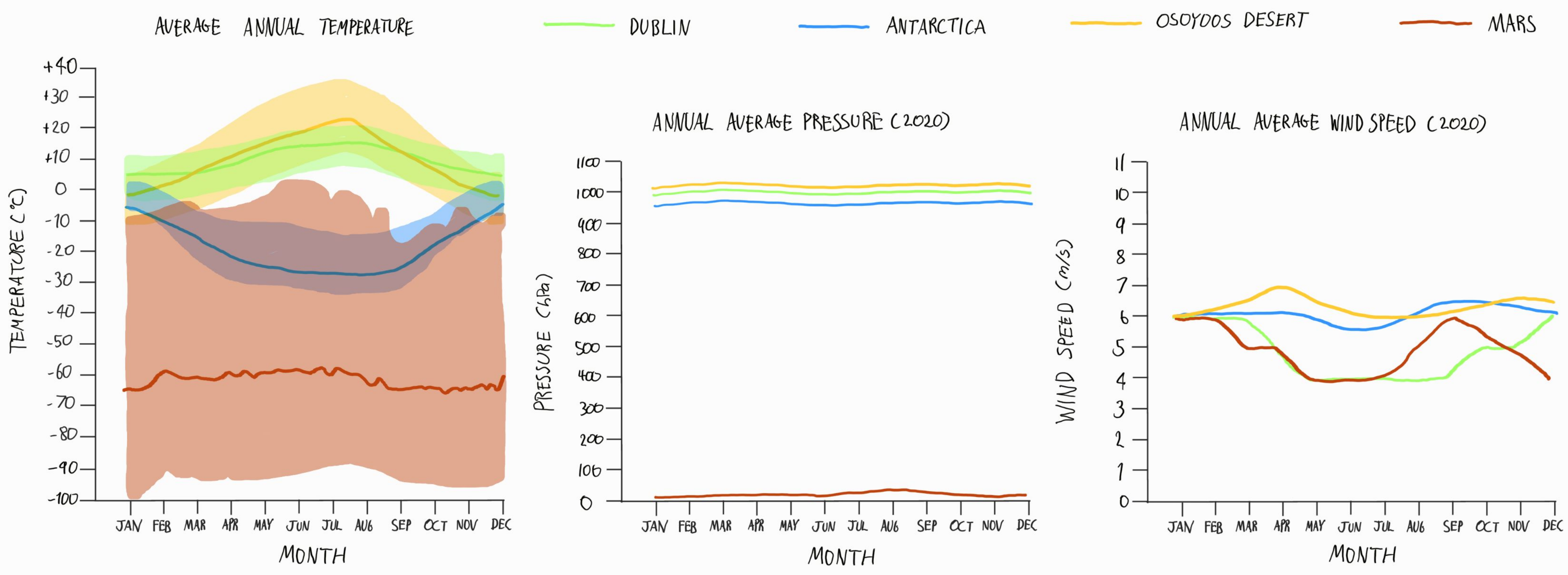

TDS: T5.2 Micro Thesis Developed Investigation

24/03/2021

Liam Deguara, C17336913, Year 4 Architectural Technology, Dublin School of Architecture, TU Dublin

Sheet 1

DSA

OLLSCOIL TEICNEOLAÍOCHTA BHAILE ÁTHA CLIATH
TU DUBLIN
TECHNOLOGICAL UNIVERSITY DUBLIN

How can we design homes for extreme climate conditions on Mars?

Halley VI Initial Panel Joint Detail

Panel Joint Detail (2D)

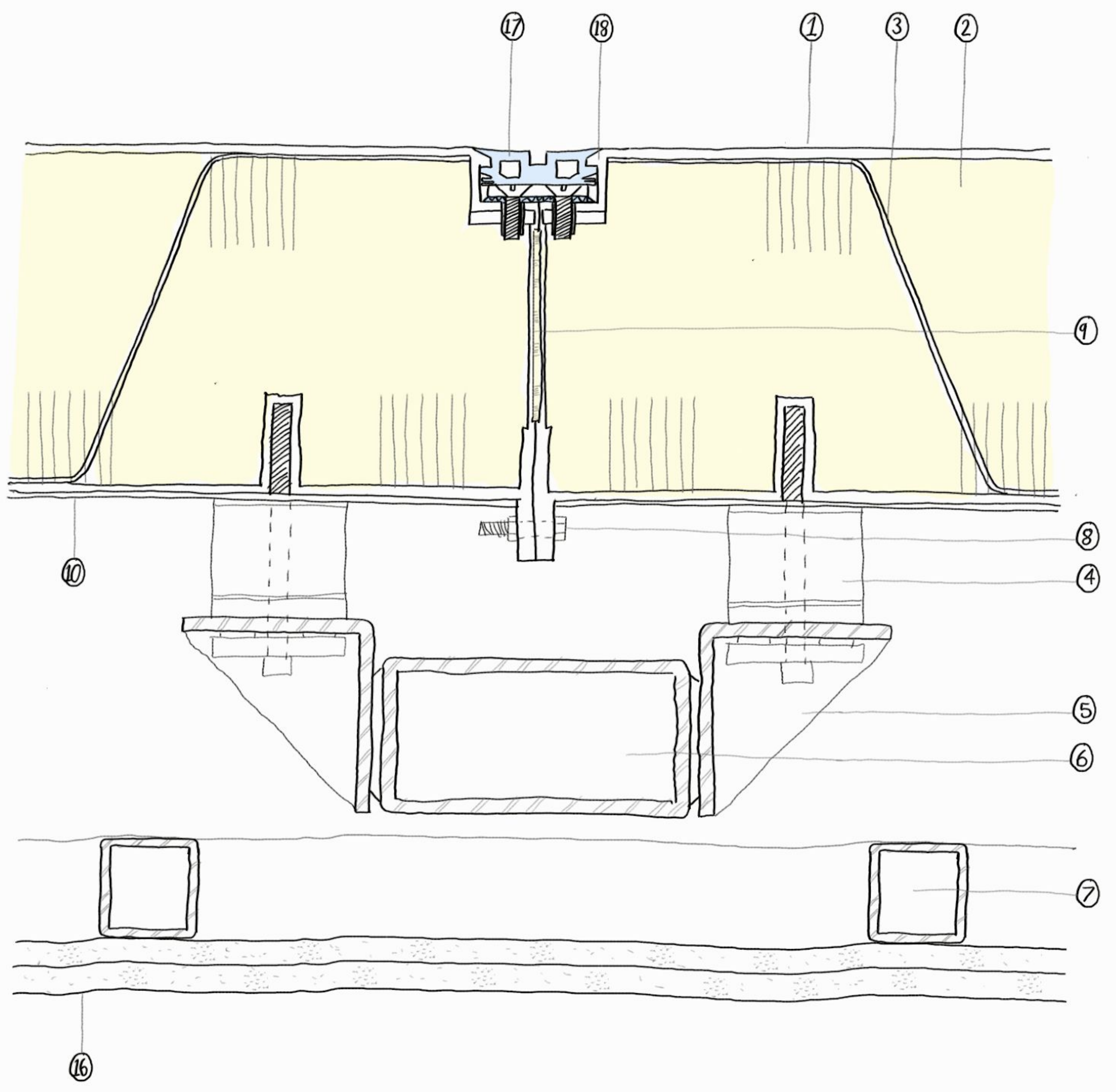

Panel Joint Detail (3D)

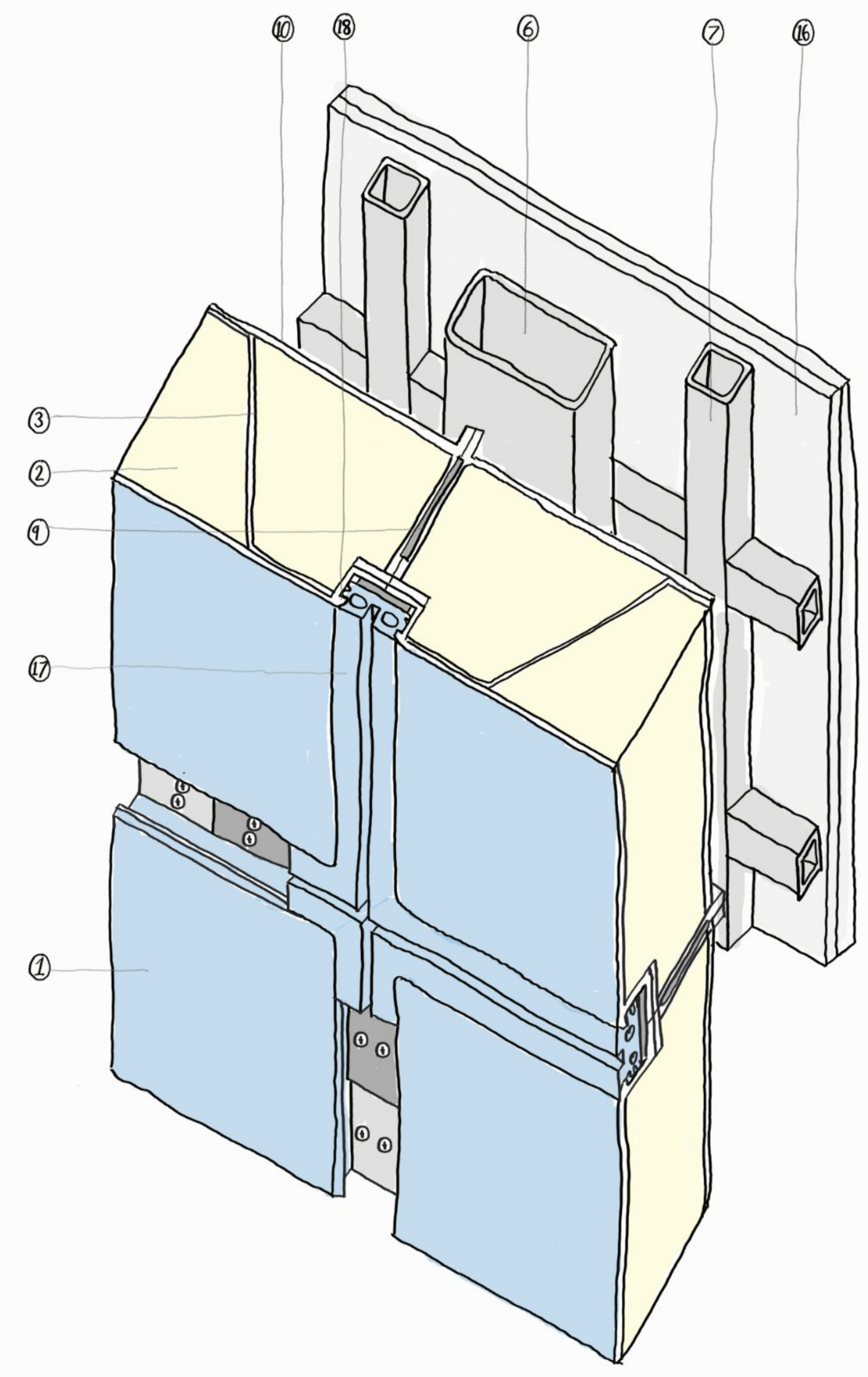

1 GRP outer skin to panels finished with gel coat and oversprayed with polyurethane acrylic automotive paint to ensure UV stability. Filled polyester resin used to achieve 30 minute fire resistance.

2 190mm polyisocyanurate (PIR) closed-cell foam insulation to achieve U-Value of 0.113 Wm^2K.

3 Resin-infused cross-fibres prevent delamination under wind load.

4 Flexible elastic-silicone cladding mounting screwed into GRP "hardpoints" cast into panels

5 Steel cladding brackets welded to primary steel superstructure.

6 Steel superstructure finished in intumescent coating to achieve one-hour fire resistance. Steel grade selected for performance at extremely low temperatures.

7 Steel structure to prefabricated room pods (bedrooms, bathrooms, offices, etc)

8 Panels bolted together through GRP flanges using stainless-steel fixings.

9 Continuous compressible neoprene insulation maintains thermal performance a joints, finished with PTFE to reduce friction during installation.

10 GRP inner skin to panels finished with intumescent paint to achieve Cs3d2 (Class 0) surface spread of flame characteristics.

11 Panels jointed with GRP jointing strip fixed with countersunk M0 stainless-steel cap screws through compressed foam neoprene gasket.

12 Extruded aluminium internal cover mounting strip.

13 Aluminium mounting strip fixed with coach screws. Foamed EPDM compressed gasket seal between mounting strip and panel.

14 Extruded aluminium external cover strip finished with polyurethane acrylic automotive paint to match panel finish, fixed to internal aluminium mounting strip with self-drilling stainless-steel fasteners.

15 Junction cover gasket formed in foamed EPDM.

16 Pods lined in 2 layers of Fermacell plasterboard selected for rigidity and acoustic performance.

17 Silicone rubber sealing gasket.

18 Lip in panel to receive gasket.

19 Gasket lips machined off to create a smooth corner detail.

Cladding Joint Defects

The cladding design proved to be one of the greatest challenges. Architect Hugh Broughton pioneered the use of glass-reinforced plastic (GRP) on Halley VI. Although the design of the panels was carefully trialled, when the first ones went to Antarctica they failed, with small cracks opening up in the surfaces. Many of these were around the complex moulding in the joint between panels, but some were also in the panel centres.

The contractor continued with the erection, but also appointed David Kendall, a structural engineer specialising in composites, to investigate the problem and help devise a solution. Kendall's investigation showed that none of the cracks were structural and that in fact, the structural performance of even the worst affected panels was very good.

The source of the problem was 'resin-rich' areas where the resin had pooled, without adequate fibre, because of the difficulty that the filled resin had in passing through the moulding. Working with the architects and structural engineer, he came up with a solution that allowed many of the panels, which had already been fabricated, to be remediated rather than having to be entirely remade.

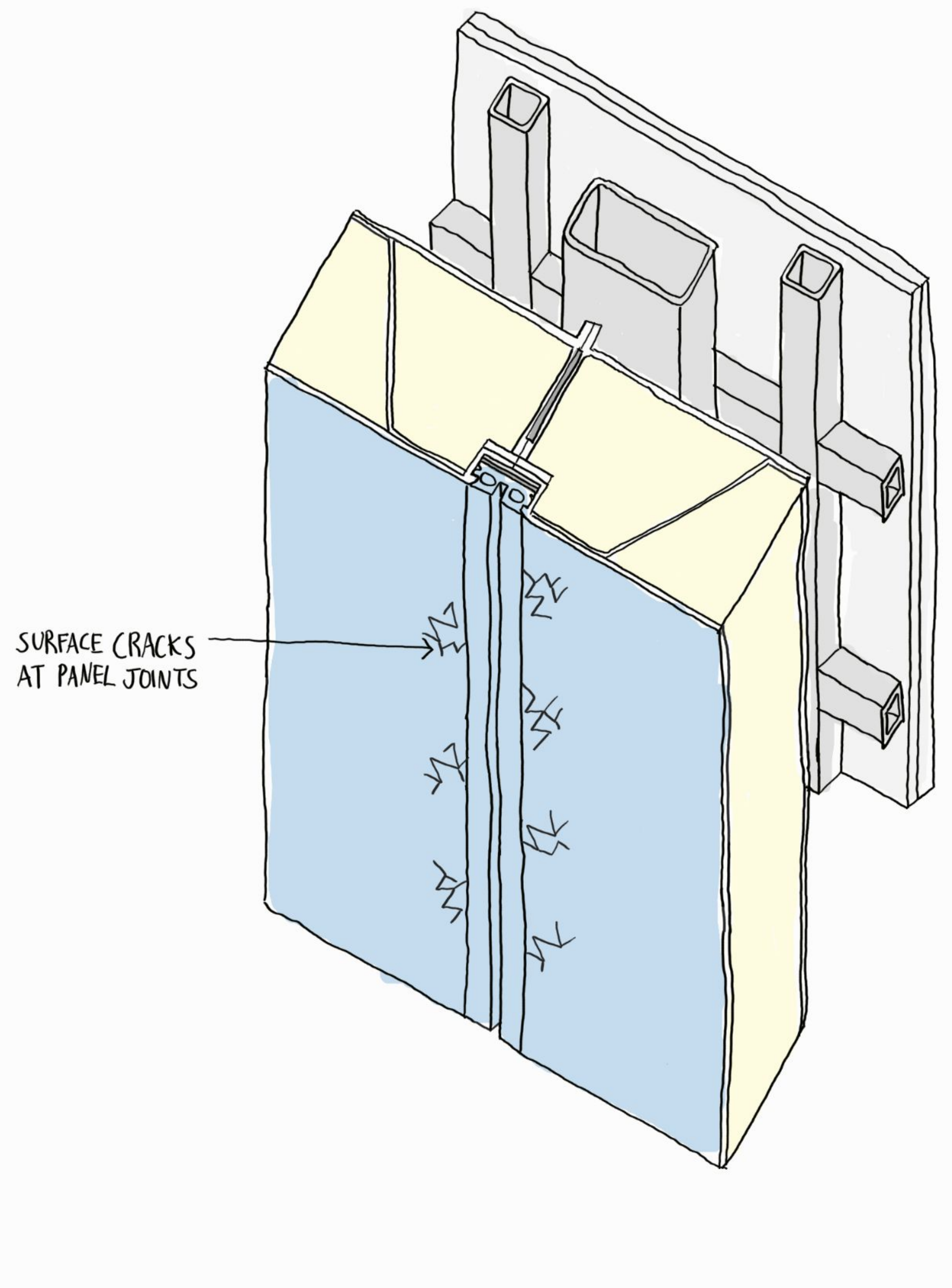

CONSTRUCTION

SEQUENCE

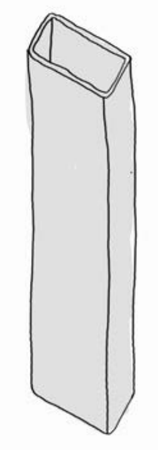

1 The steel superstructure is erected.

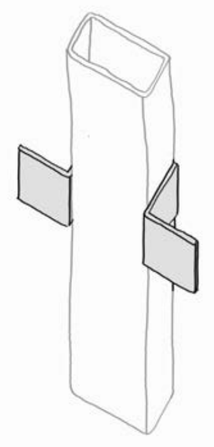

2 The steel cladding brackets are welded to the primary steel superstructure.

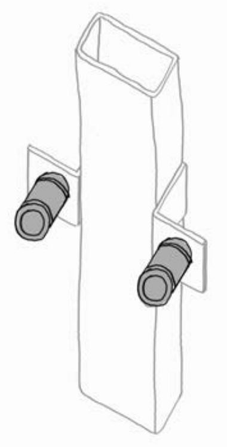

3 Flexible elastic-silicone cladding mounting points are attached to the cladding brackets.

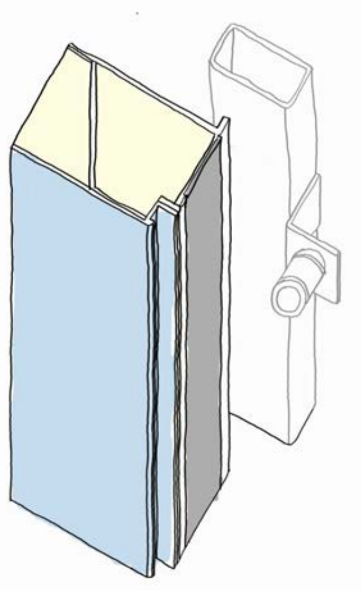

4 A cladding panel is hoisted into position over the mounting point.

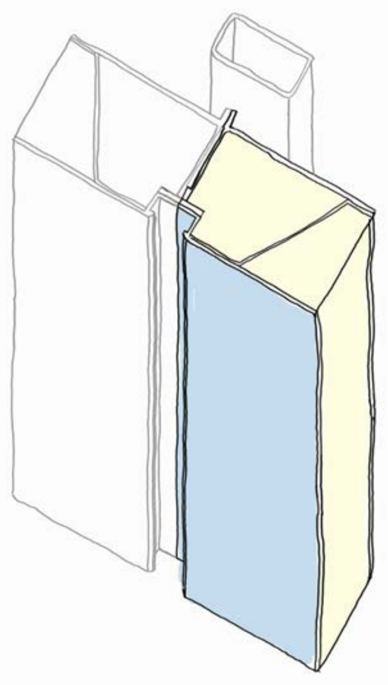

5 The adjoining cladding panel is hoisted into position.

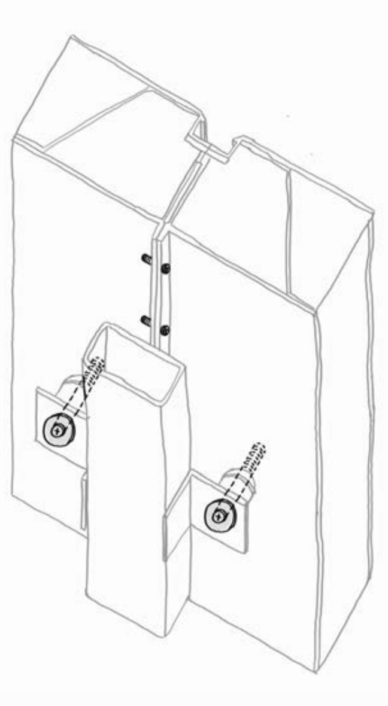

6 The panels are bolted together through GRP flanges using stainless-steel fixings. The panels are fixed back to the structure through the mounting screws into panels "hardpoints" cast into the panels

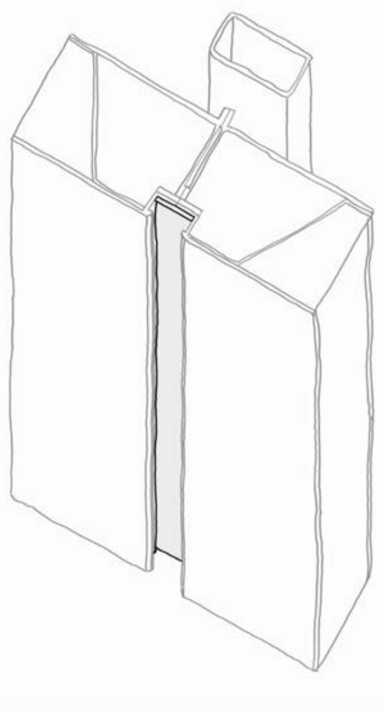

7 The panels are jointed with a GRP jointing strip.

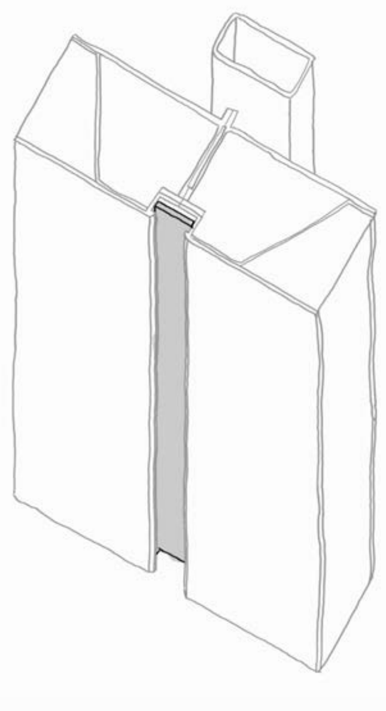

8 A compressed foam neoprene gasket covers the jointing strip.

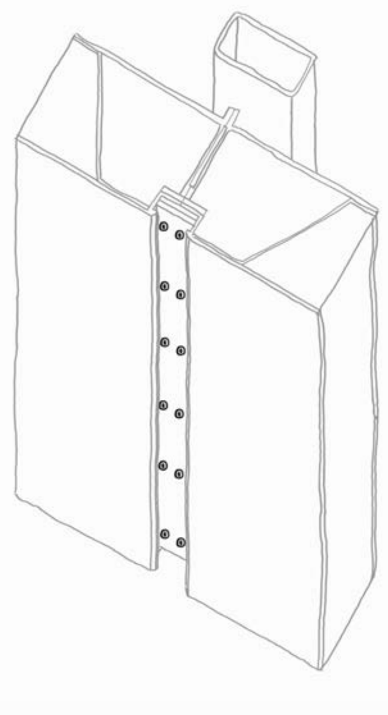

9 Countersunk M0 stainless-steel cap screws are fixed through the compressed foam neoprene gasket to fix the GRP jointing strip to the panels.

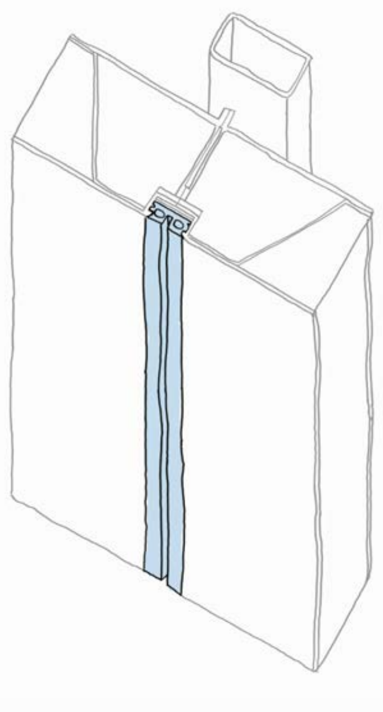

10 A silicone rubber sealing gasket that matches the panel finish fills the joint.

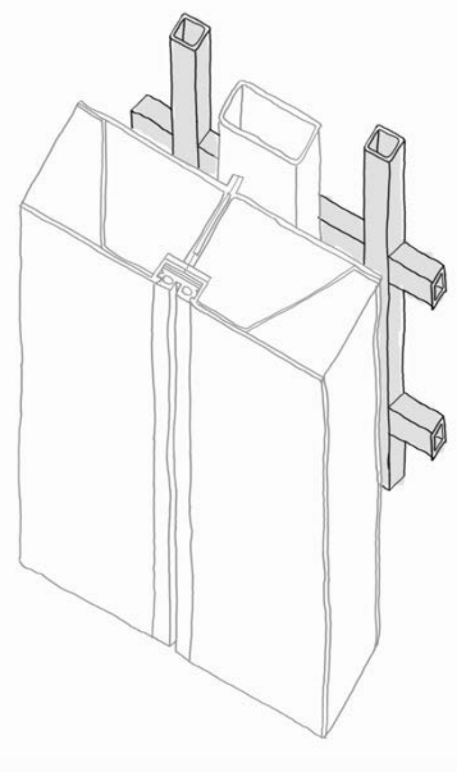

11 Steel studs are erected inside the primary structure to host the plasterboards.

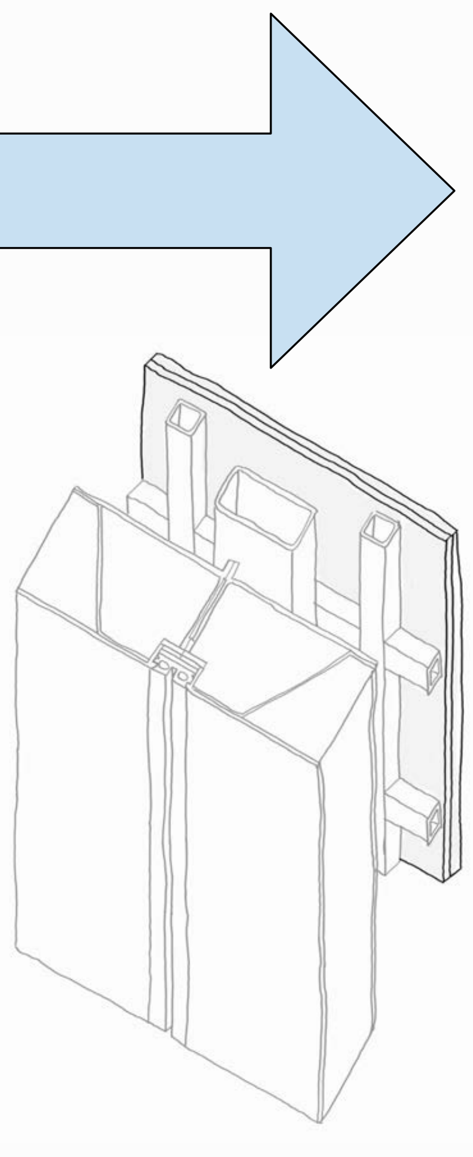

12 Two layers of Fermacell plasterboard are fixed to the steel studs.

TDS: T5.2 Micro Thesis Developed Investigation **24/03/2021**

Liam Deguara, C17336913, Year 4 Architectural Technology, Dublin School of Architecture, TU Dublin

How can we design homes for extreme climate conditions on Mars?

Halley VI Revised Panel Joint Detail

CONSTRUCTION

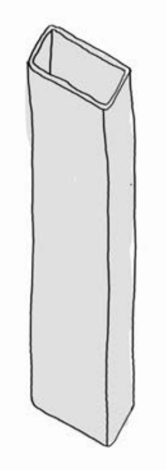

1 The steel superstructure is erected.

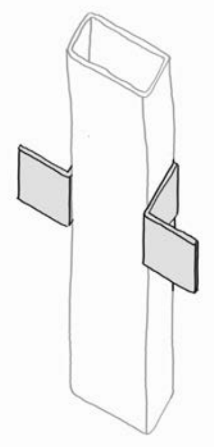

2 The steel cladding brackets are welded to the primary steel superstructure.

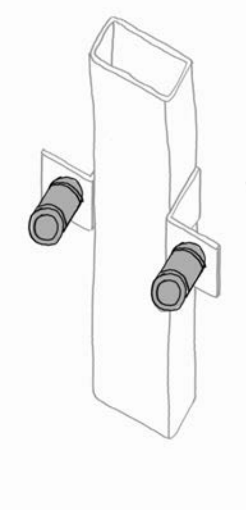

3 Flexible elastic-silicone cladding mounting points are attached to the cladding brackets.

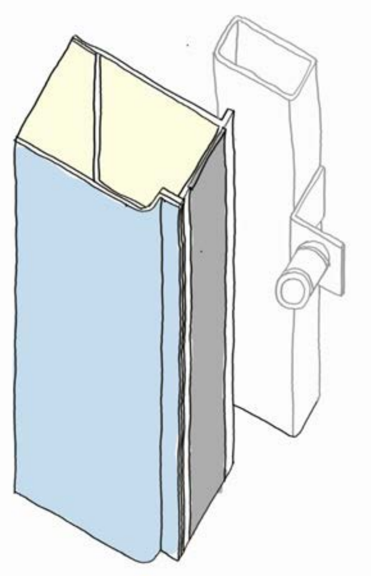

4 A cladding panel is hoisted into position over the mounting point.

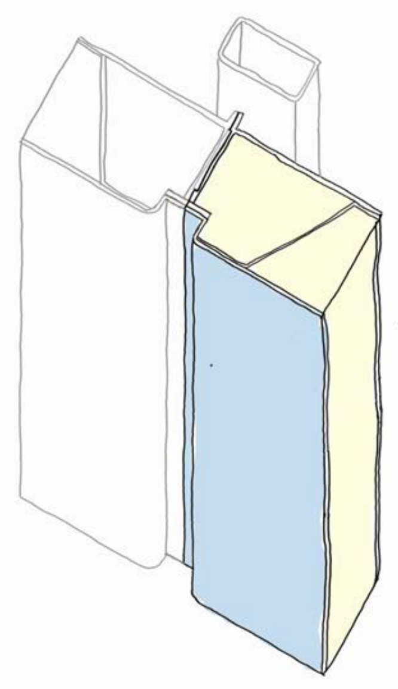

5 The adjoining cladding panel is hoisted into position.

Panel Joint Detail (2D)

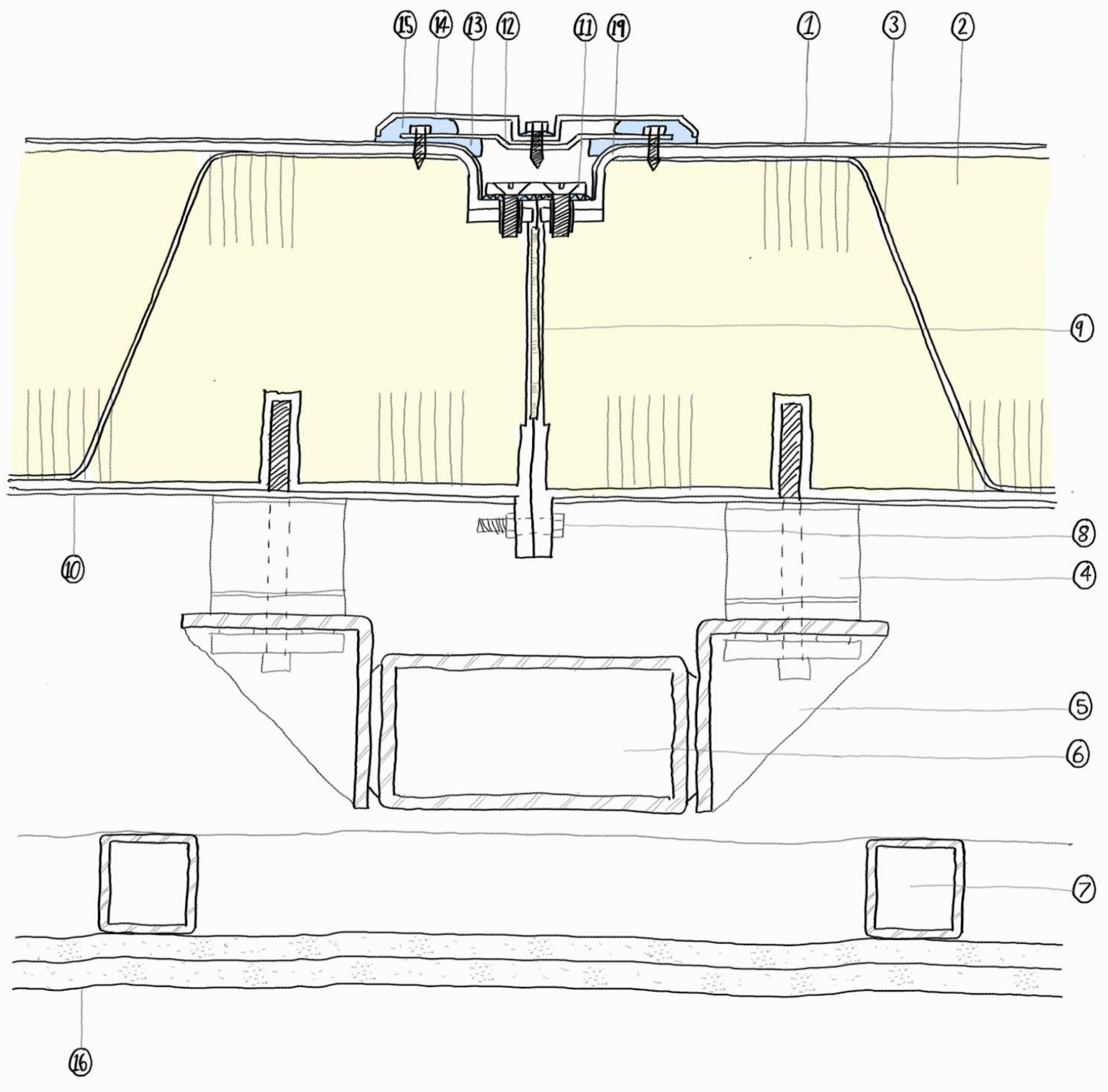

Panel Joint Detail (3D)

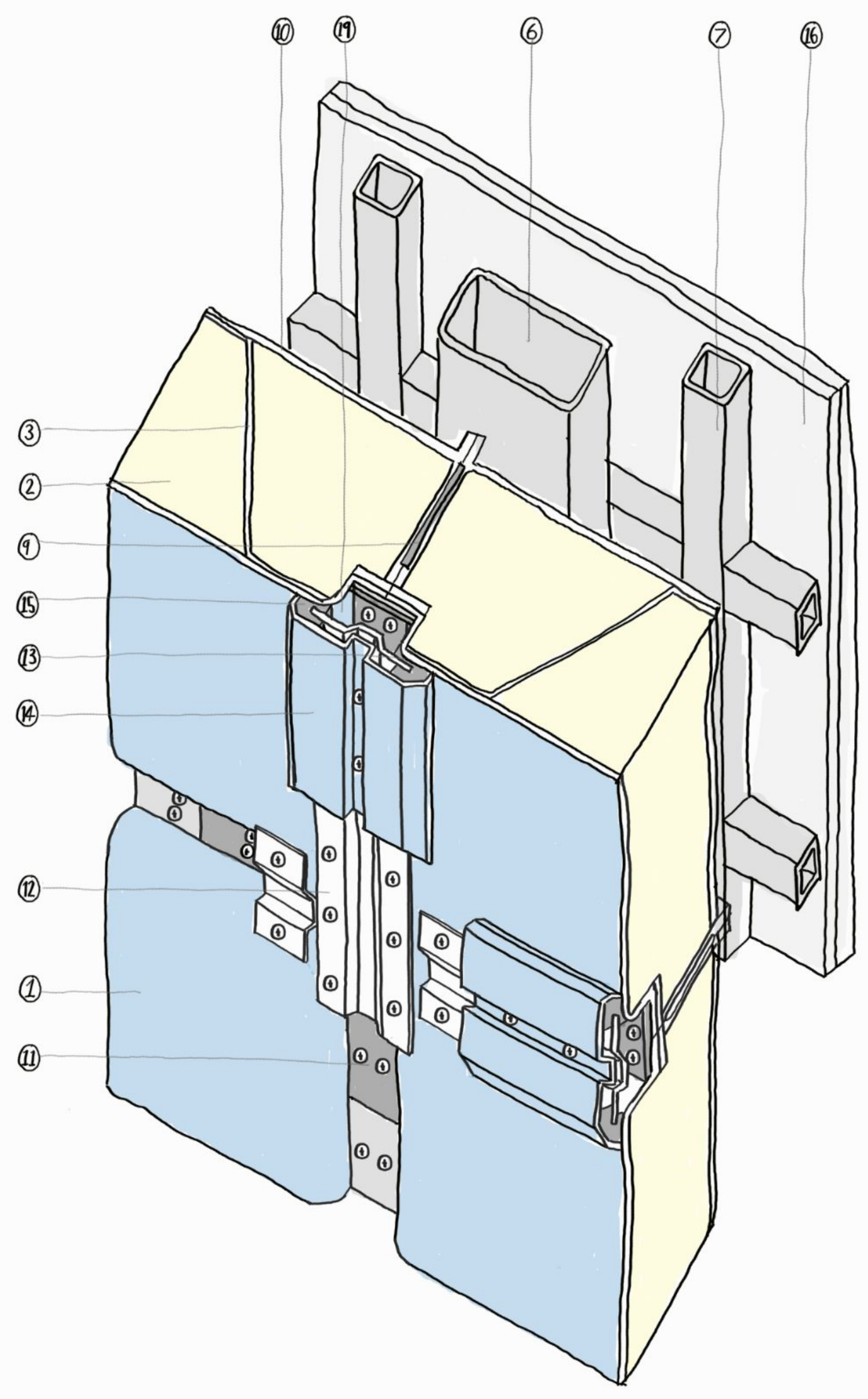

1 GRP outer skin to panels finished with gel coat and oversprayed with polyurethane acrylic automotive paint to ensure UV stability. Filled polyester resin used to achieve 30 minute fire resistance.

2 190mm polyisocyanurate (PIR) closed-cell foam insulation to achieve U-Value of 0.113 Wm^{2}K.

3 Resin-infused cross-fibres prevent delamination under wind load.

4 Flexible elastic-silicone cladding mounting screwed into GRP “hardpoints” cast into panels

5 Steel cladding brackets welded to primary steel superstructure.

6 Steel superstructure finished in intumescent coating to achieve one-hour fire resistance. Steel grade selected for performance at extremely low temperatures.

7 Steel structure to prefabricated room pods (bedrooms, bathrooms, offices, etc)

8 Panels bolted together through GRP flanges using stainless-steel fixings.

9 Continuous compressible neoprene insulation maintains thermal performance a joints, finished with PTFE to reduce friction during installation.

10 GRP inner skin to panels finished with intumescent paint to achieve Cs3d2 (Class 0) surface spread of flame characteristics.

11 Panels jointed with GRP jointing strip fixed with countersunk M0 stainless-steel cap screws through compressed foam neoprene gasket.

12 Extruded aluminium internal cover mounting strip.

13 Aluminium mounting strip fixed with coach screws. Foamed EPDM compressed gasket seal between mounting strip and panel.

14 Extruded aluminium external cover strip finished with polyurethane acrylic automotive paint to match panel finish, fixed to internal aluminium mounting strip with self-drilling stainless-steel fasteners.

15 Junction cover gasket formed in foamed EPDM.

16 Pods lined in 2 layers of Fermacell plasterboard selected for rigidity and acoustic performance.

17 Silicone rubber sealing gasket.

18 Lip in panel to receive gasket.

19 Gasket lips machined off to create a smooth corner detail.

Amending The Joint Defects

The joints between the panels were redesigned to be much less sharp, and the original gaskets replaced with aluminium cover plates. The joints were ground down to create the new shape, and a similar joint was designed for the red panels, which were yet to be fabricated.

The outer faces were also ‘re-skinned’ using resin without filler, since only the interior face of the panels are vulnerable to fire. The new panels underwent extensive fire and thermal testing and all were ready for shipping for the 2009/2010 season.

Erection of the panels went without a hitch - indeed it took less time than anticipated, which was fortunate, as the ship carrying the construction crew was delayed by 10 days, eating into the nine-week building timetable.

Broughton is delighted with the result. The new joints are crisper than the original gaskets, which had proved to run into difficulties where they had to turn corners. Valuable knowledge has been accumulated on using materials in extreme conditions. Broughton is now so confident of GRP’s properties that a new station he has designed for the Spanish in the Antarctic will be entirely of GRP construction, with no supporting steel frame.

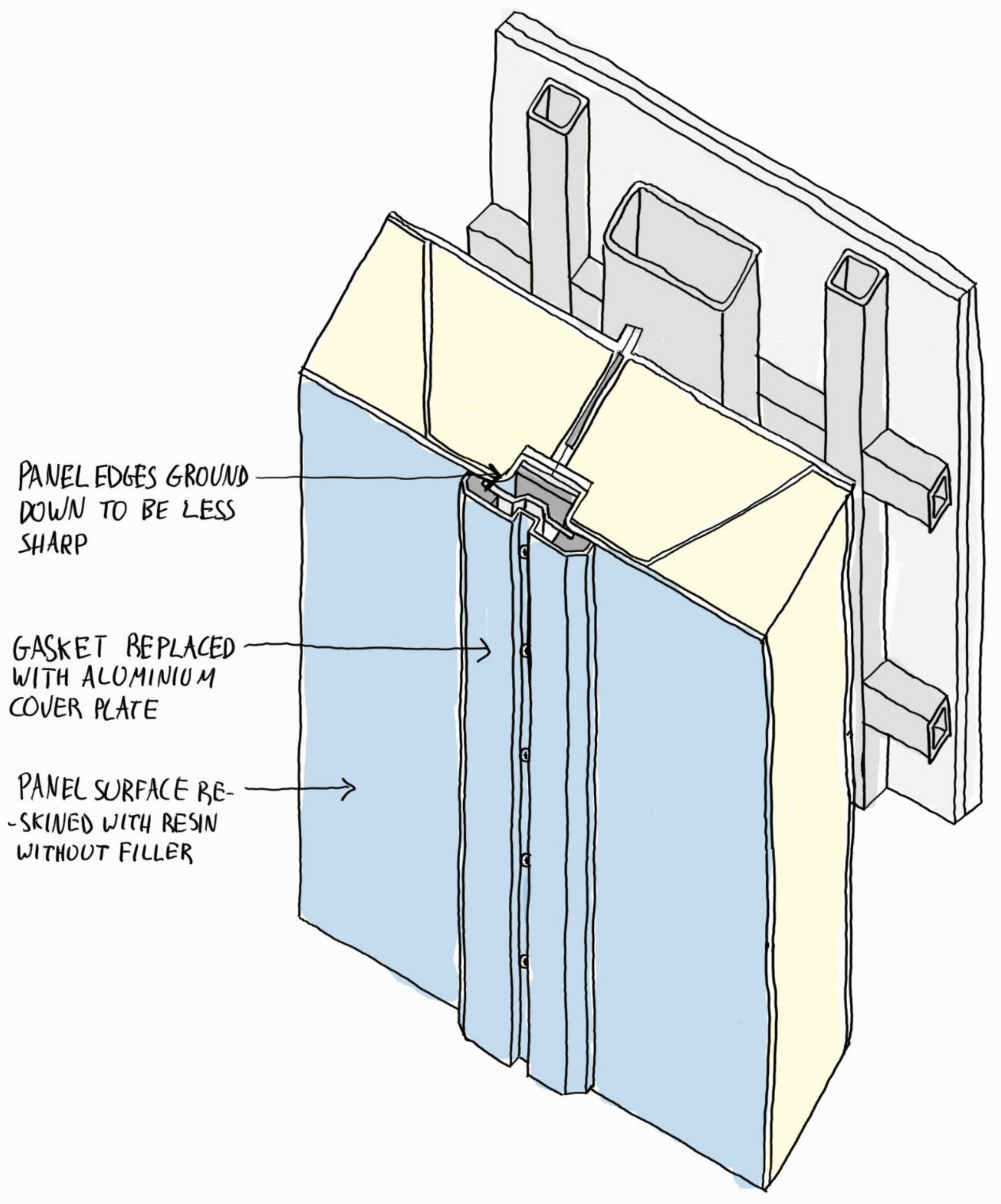

SEQUENCE

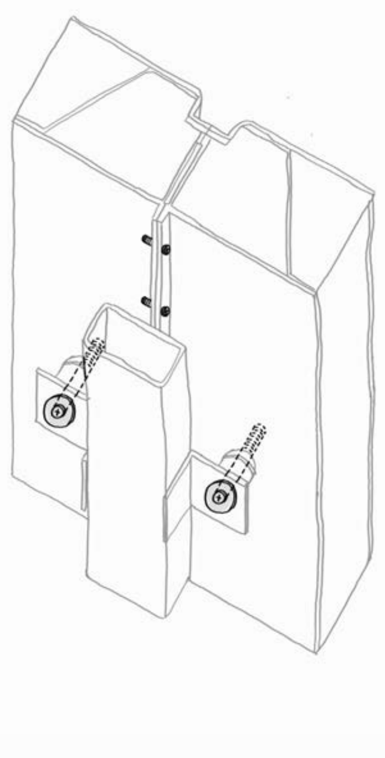

6 The panels are bolted together through GRP flanges using stainless-steel fixings. The panels are fixed back to the structure through the mounting screws into panels “hardpoints” cast into panels.

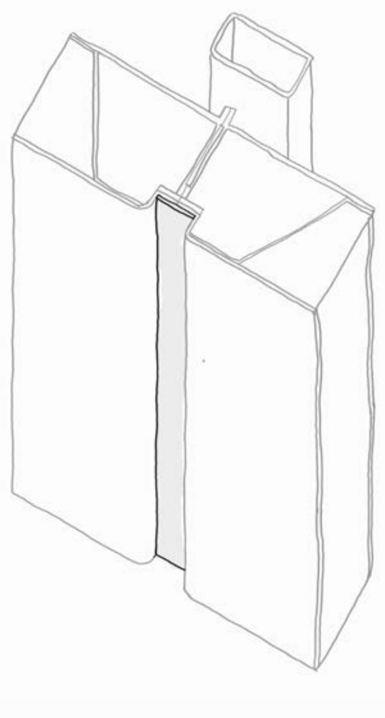

7 The panels are jointed with a GRP jointing strip.

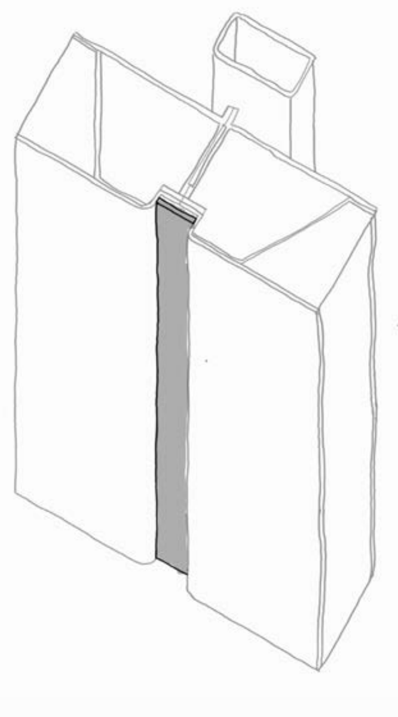

8 A compressed foam neoprene gasket covers the jointing strip.

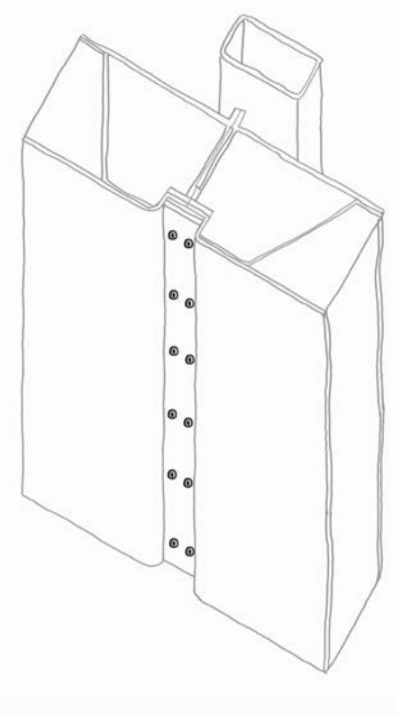

9 Countersunk M0 stainless-steel cap screws are fixed through the compressed foam neoprene gasket to fix the GRP jointing strip to the panels.

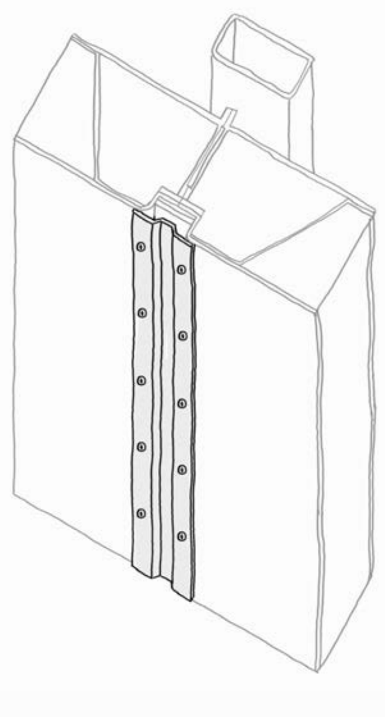

10 An extruded aluminium internal cover mounting strip is fixed to the panels with self-drilling stainless-steel fasteners.

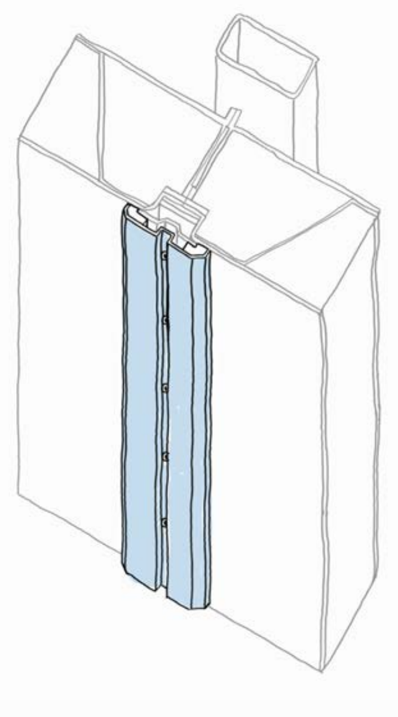

11 An extruded aluminium external cover strip finished with polyurethane acrylic automotive paint to match panel finish is fixed to internal aluminium mounting strip with self-drilling stainless-steel fasteners.

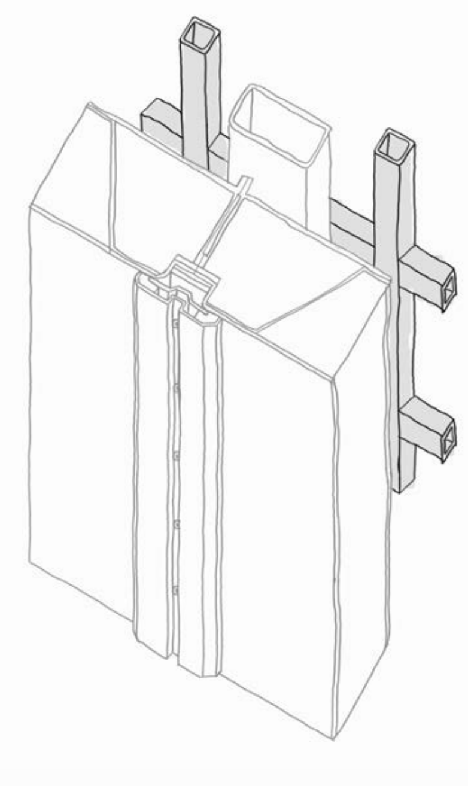

12 Steel studs are erected inside the primary structure to host the plasterboards.

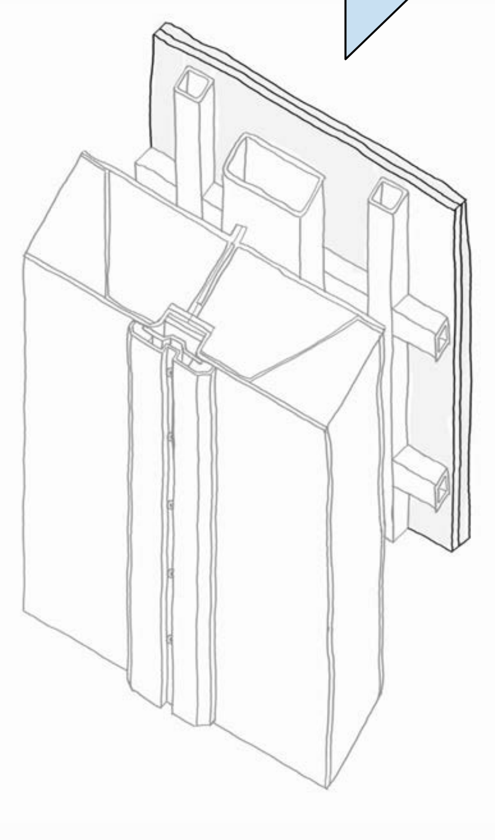

13 Two layers of Fermacell plasterboard are fixed to the steel studs.

TDS: T5.2 Micro Thesis Developed Investigation **24/03/2021**

Liam Deguara, C17336913, Year 4 Architectural Technology, Dublin School of Architecture, TU Dublin **Sheet 3**

How can we design homes for extreme climate conditions on Mars?

Halley VI Details & Heat Loss Calculation

GRP On Halley VI

Broughton originally intended to clad the modules with structural insulated panels (SIPs) similar to those used on the new US station at the South Pole.

But a manufacturer suggested the possibility of using GRP so, once Broughton had appointed Billings Design Associates (BDA) as cladding consultant, the design team considered the pros and cons of SIPs, GRP and cold-store panels.

SIPs are relatively small (limited by the size of plywood sheets) and require a lot of handling on site. With a short summer season of only three months and each construction worker costly to maintain, this was a real concern. Jointing could also be difficult, and there was a further worry that high winds could suck the timber face off the insulation layer below.

On Halley V this problem was overcome by using a timber batten to join the front and back faces. But in the extreme cold, even timber will act as a cold bridge. Cold store panels are simple to construct and are obviously adapted to low temperatures. But they degrade rapidly, especially when exposed to ultraviolet light.

Design life would only have been five to 10 years. The advantages of GRP were obvious. It forms large panels and is light, making it easy to handle and install. It is used in cryogenic applications, so can evidently withstand low temperatures. But this project pushed GRP technology - more commonly used in aircraft or train construction - to its limits.

The contract was awarded to South African company MMS Technologies, partly because it was one of the few manufacturers capable of creating both steel frame and GRP cladding as a complete package, and partly because of the technology it used to make the GRP.

There are two components in GRP: a mat of fine glass fibres and the resin that infuses them. The mat is threaded through the insulation, in this case in the form of trapezoidal blocks. Unusually, MMS used a vacuum method of infusing the resin.

'They had massive truck bodies that they were making in one piece,' says Sean Billings of BDA. 'They put them in a big plastic bag and poured the resin in through little tubes and just sucked it through.' This approach allowed the design team to develop large panels and create a semi-monocoque structure, with panels fixed to rubber mountings.

Early test castings were encouraging, but there were problems caused by the demanding requirements for fire resistance. To meet these, the design team added a 'filler', aluminium trihydrate, to the resin. This has the effect of giving off water vapour in a fire, and so improves performance. But it also makes the resin more viscous and so more difficult to infuse under vacuum suction.

With the largest panels measuring 10.4 x 3.3m, this was a problem. It slowed down production, and meant that instead of having all the panels for the blue modules ready for shipping for the summer season of 2007/2008, the panels for only one module were ready.

GRP Window Panel

GRP Production

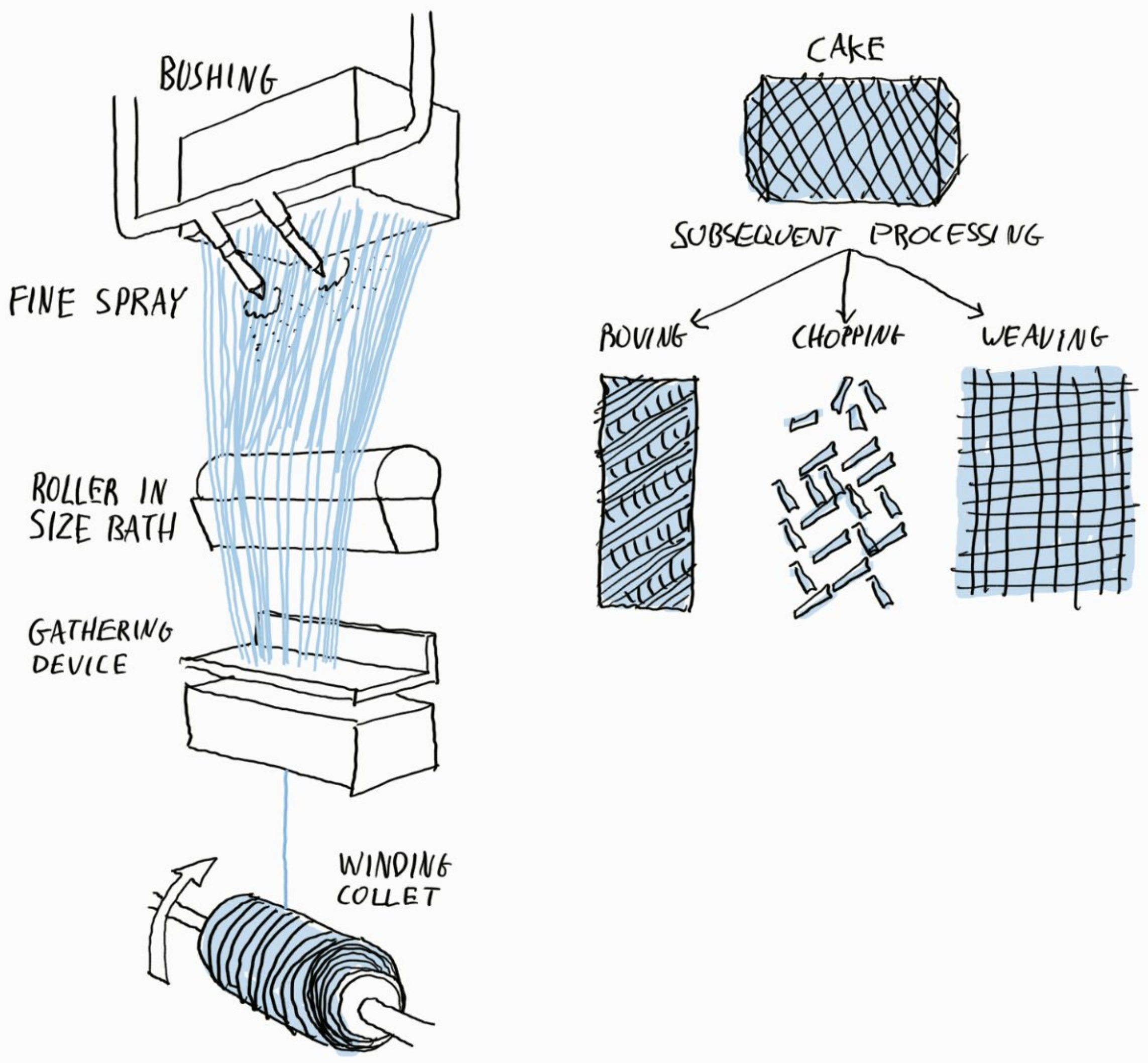

Window Detail (3D)

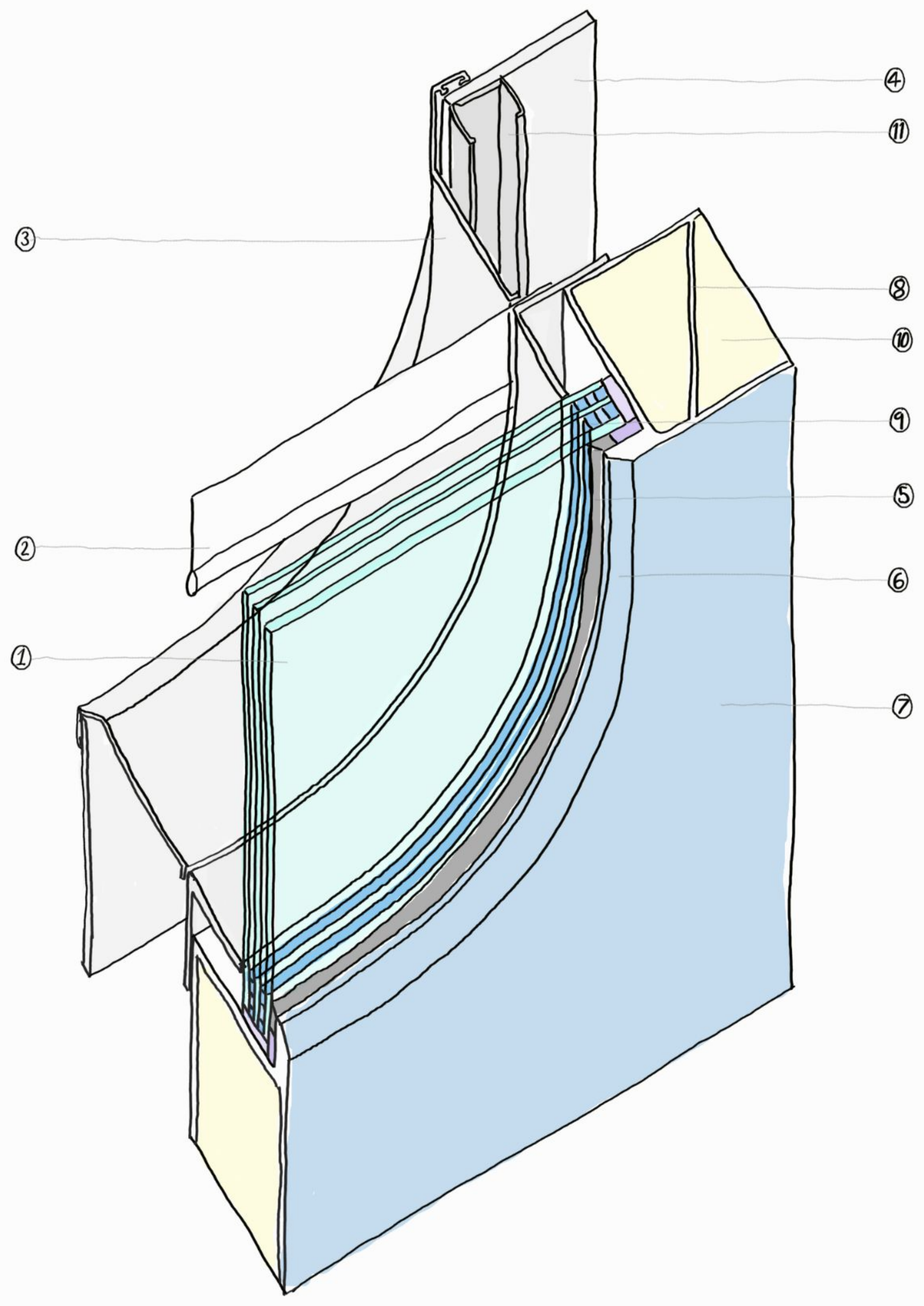

1 Triple glazed window unit.

2 Blind.

3 Window trim.

4 1 layers of Fermacell plasterboard selected for rigidity and acoustic performance.

5 External wedge gasket.

6 Chamfer to exterior of window reveal in panel.

7 GRP outer skin to panels finished with gel coat and oversprayed with polyurethane acrylic automotive paint to ensure UV stability. Filled polyester resin used to achieve 30 minute fire resistance.

8 Resin-infused cross-fibres prevent delamination under wind load.

9 Intermediate window glazing spacers.

10 190mm polyisocyanurate (PIR) closed-cell foam insulation to achieve U-Value of 0.113Wm^{2}K.

11 Steel studwork.

Energy Loss Through External Envelope

Area (m^2) x U-Value (Wm^{2}K) x Temperature Difference (°C) = Heat Loss (Wm^{2}h)

Dublin, Ireland

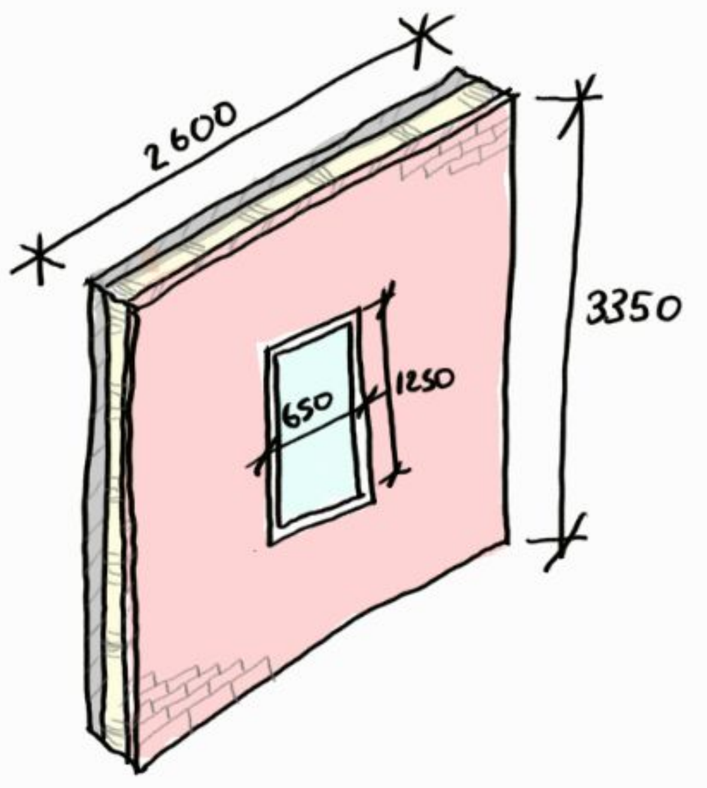

Area

Total Area:	8.72m^2
Wall Area:	7.91m^2
Window Area:	0.81m^2

U-Value

Wall:	0.18Wm^{2}K
Window:	1.4Wm^{2}K

Temperature

Outside:	19°C (Summer) 3°C (Winter)
Inside:	20°C

Summer
(7.91 x 0.18 x 1) + (0.81 x 1.4 x 1) = 2.55Wm^{2}h

Winter
(7.91 x 0.18 x 17) + (0.81 x 1.4 x 17) = 43.48Wm^{2}h

Halley VI, Antarctica

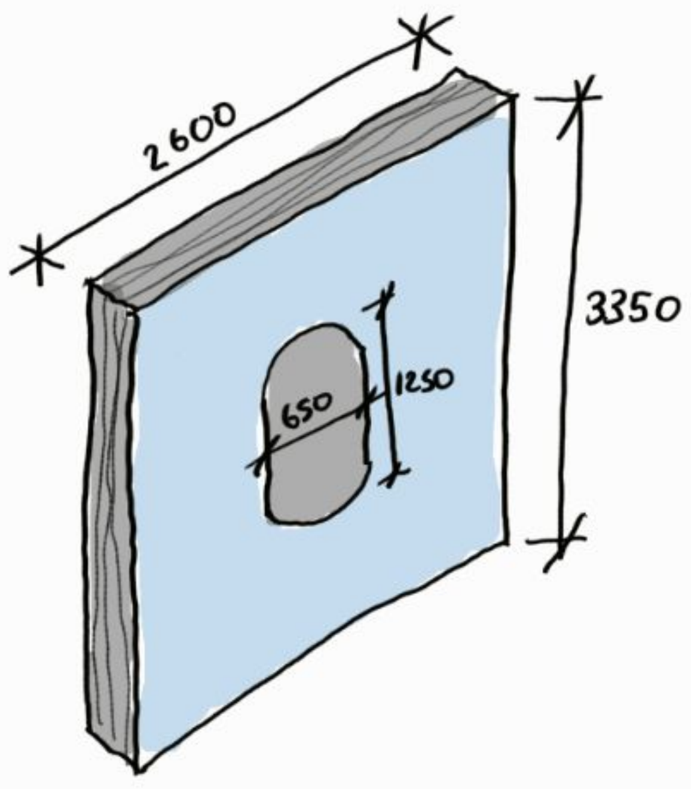

Area

Total Area:	8.72m^2
Wall Area:	7.91m^2
Window Area:	0.81m^2

U-Value

Wall:	0.113Wm^{2}K
Window:	1.0Wm^{2}K

Temperature

Outside:	0°C (Summer) -28°C (Winter)
Inside:	20°C

Summer
(7.91 x 0.113 x 20) + (0.81 x 1.0 x 20) = 34.08Wm^{2}h

Winter
(7.91 x 0.113 x 48) + (0.81 x 1.0 x 48) = 81.78Wm^{2}h

Osoyoos Desert, Canada

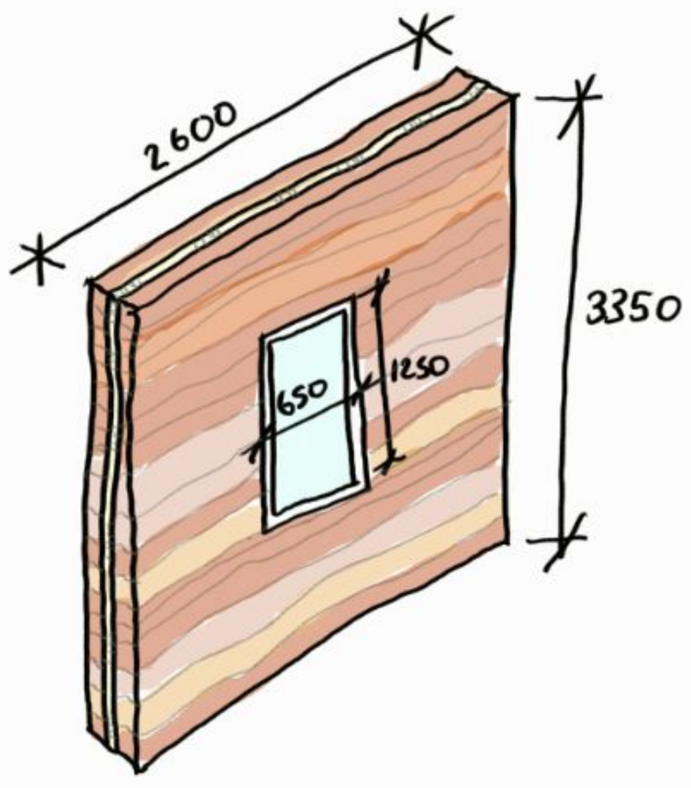

Area

Total Area:	8.72m^2
Wall Area:	7.91m^2
Window Area:	0.81m^2

U-Value

Wall:	0.21Wm^{2}K
Window:	1.2Wm^{2}K

Temperature

Outside:	32°C (Summer) -4°C (Winter)
Inside:	20°C

Summer
(7.91 x 0.21 x 12) + (0.81 x 1.2 x 12) = 31.59Wm^{2}h

Winter
(7.91 x 0.21 x 24) + (0.81 x 1.2 x 24) = 54.92Wm^{2}h

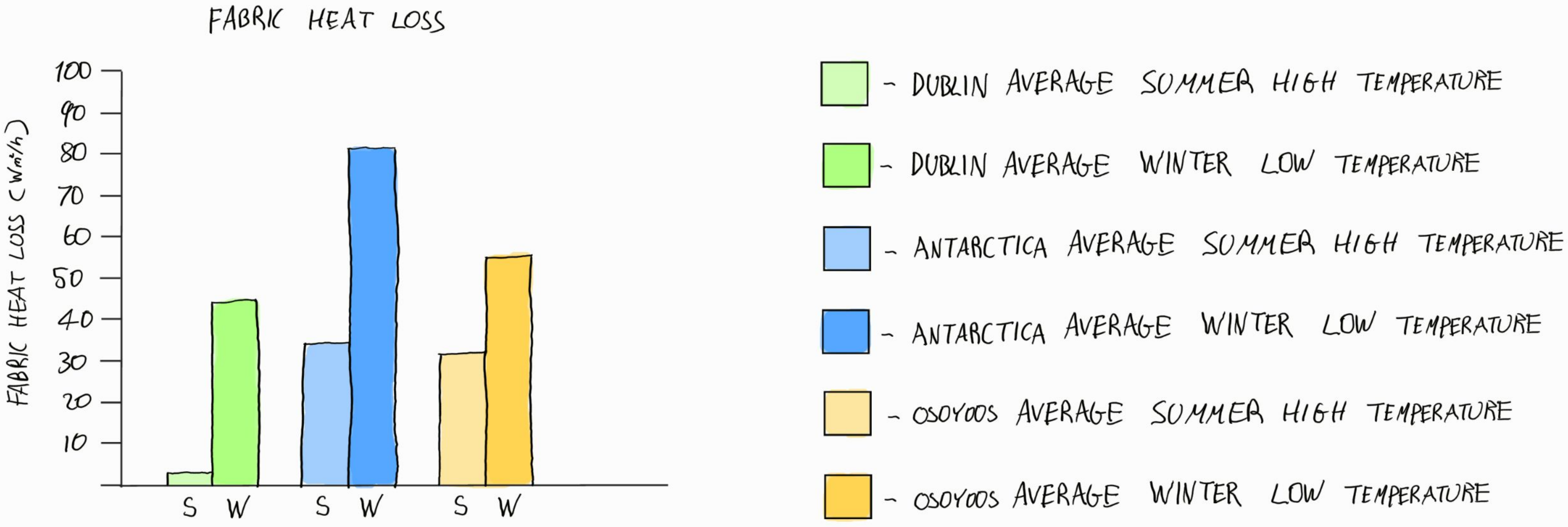

TDS: T5.2 Micro Thesis Developed Investigation — **24/03/2021**

Liam Deguara, C17336913, Year 4 Architectural Technology, Dublin School of Architecture, TU Dublin — **Sheet 4**

How can we design homes for extreme climate conditions on Mars?

Case Study: Desert Cultural Centre, Osoyoos, Canada

Project Information

- **Name:** Nk'Mip Desert Culture Centre
- **Location:** Osoyoos, Canada
- **Architect:** DIALOG
- **Client:** Osoyoos Indian Band
- **Contractor:** Greyback Construction
- **Engineers:** Cobalt Engineering
  Equilibrium Consulting
  MCL Engineering
- **Completion date:** 2006
- **Size (area):** 775m²

Ground Floor Plan

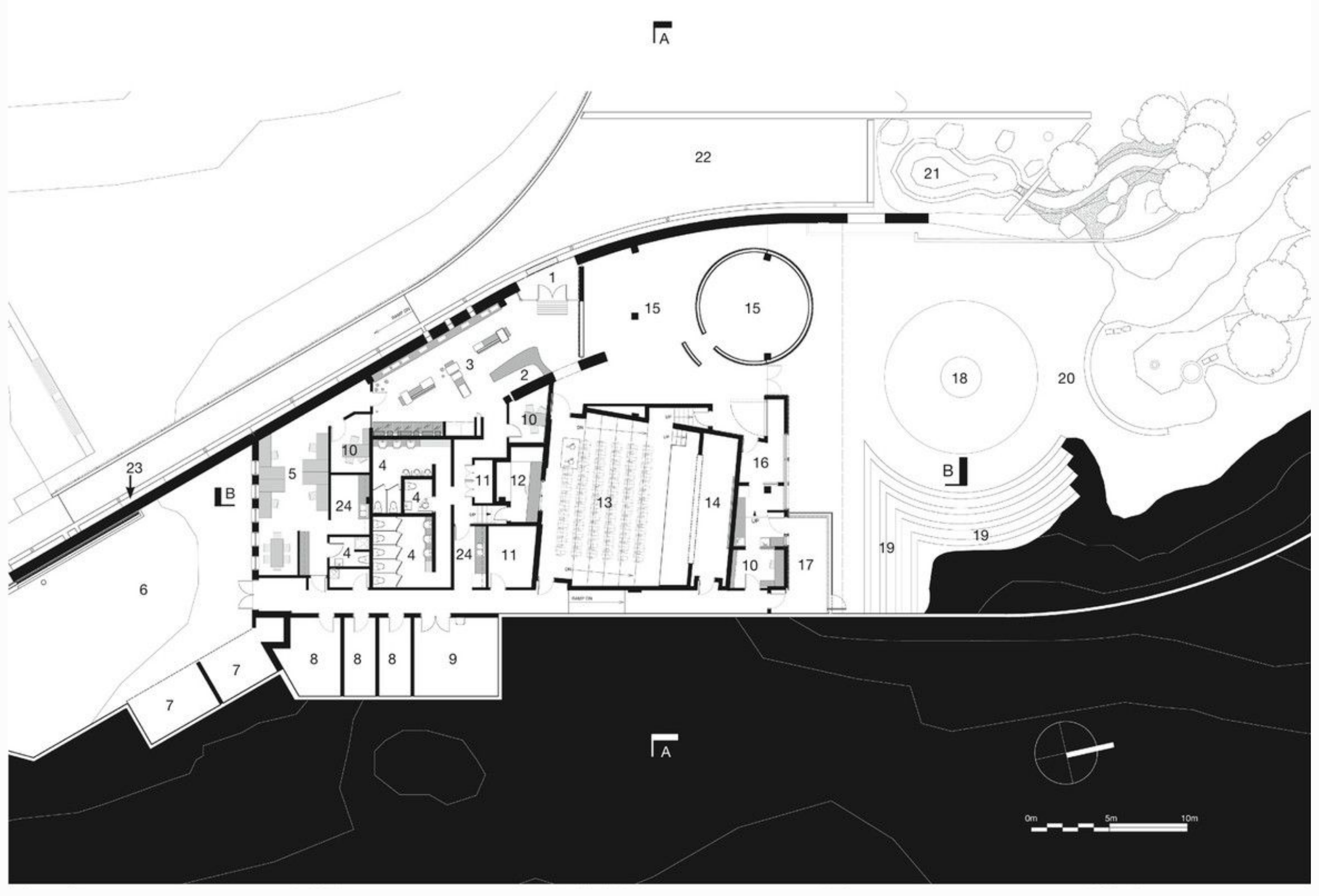

Legend

1 Entry
2 Reception
3 Gift Shop
4 Washroom
5 Administration
6 Service Yard
7 Garbage/Recycling
8 Service Room
9 Workshop
10 Office
11 Storage
12 AV Control Room
13 Lecture/Performance Theatre
14 Stage
15 Exhibit Gallery
16 Animal Habitat Display
17 Demonstration Area
18 Outdoor Amphitheatre
19 Seating
20 Outdoor Intererative Area
21 Retention Pond/Animal Habitat
22 Terrace
23 Desert Stream

West Elevation

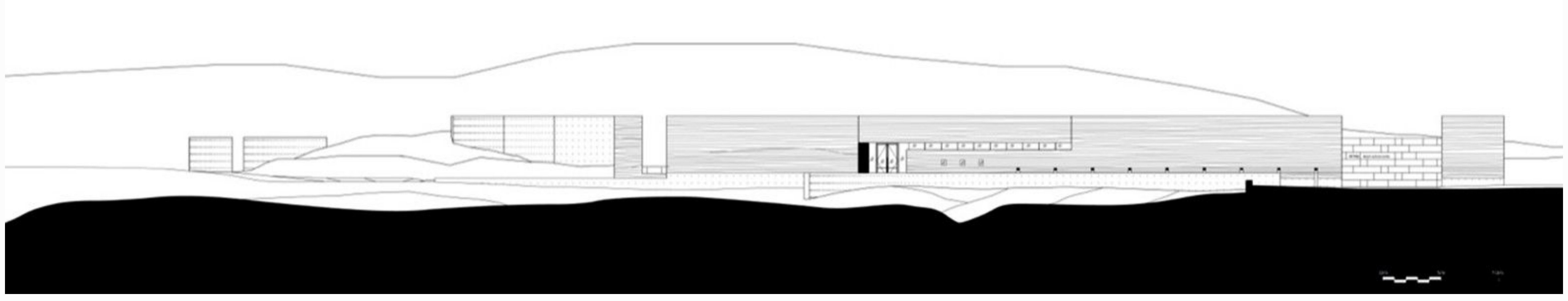

Sustainability

The extreme climate made sustainable design a very particular challenge. Hot, dry summers and cool, dry winters see average temperatures ranging from –18 degrees to +33 degrees and often reaching +40 on summer days. The building's siting and orientation are the first strategic moves toward sustainability: the partially buried structure mitigates the extremes in temperature, and its orientation optimizes passive solar performance, with glazing minimized on the south and west sides. The project's ambitious approach towards sustainable design also includes the following features: The largest rammed earth wall in North America.

At 80m long, 5.5m high, and 600mm thick, this insulated wall (R33) stabilizes temperature variations. Constructed from local soils mixed with concrete and colour additives, it retains warmth in the winter, its substantial thermal mass cooling the building in the summer—much like the effect the surrounding earth has on a basement.

Green Roof

A habitable green roof. This habitable landscaped roof reduces the building's visual imprint on the landscape, and allows a greater percentage of the desert landscape habitat to be re-established on the site (replanting uses indigenous species). The roof also provides further temperature stabilization and insulation.

Mechanical Features

In-slab radiant cooling and heating in both ceiling and floor slabs create an even, comfortable environment that avoids blasts of air, noise and dust. Coupled with 100% outdoor air displacement ventilation, the system will result in savings of 30 to 50% over a forced air system.

Water Use Management

Water is precious in the desert, and a spare channel of water at the entrance along the rammed earth wall introduces this theme. Less visibly, demand on the site fed well is reduced by 40% by incorporating low-flow faucets, waterless urinals, and dual flush toilets.

1:20 Section

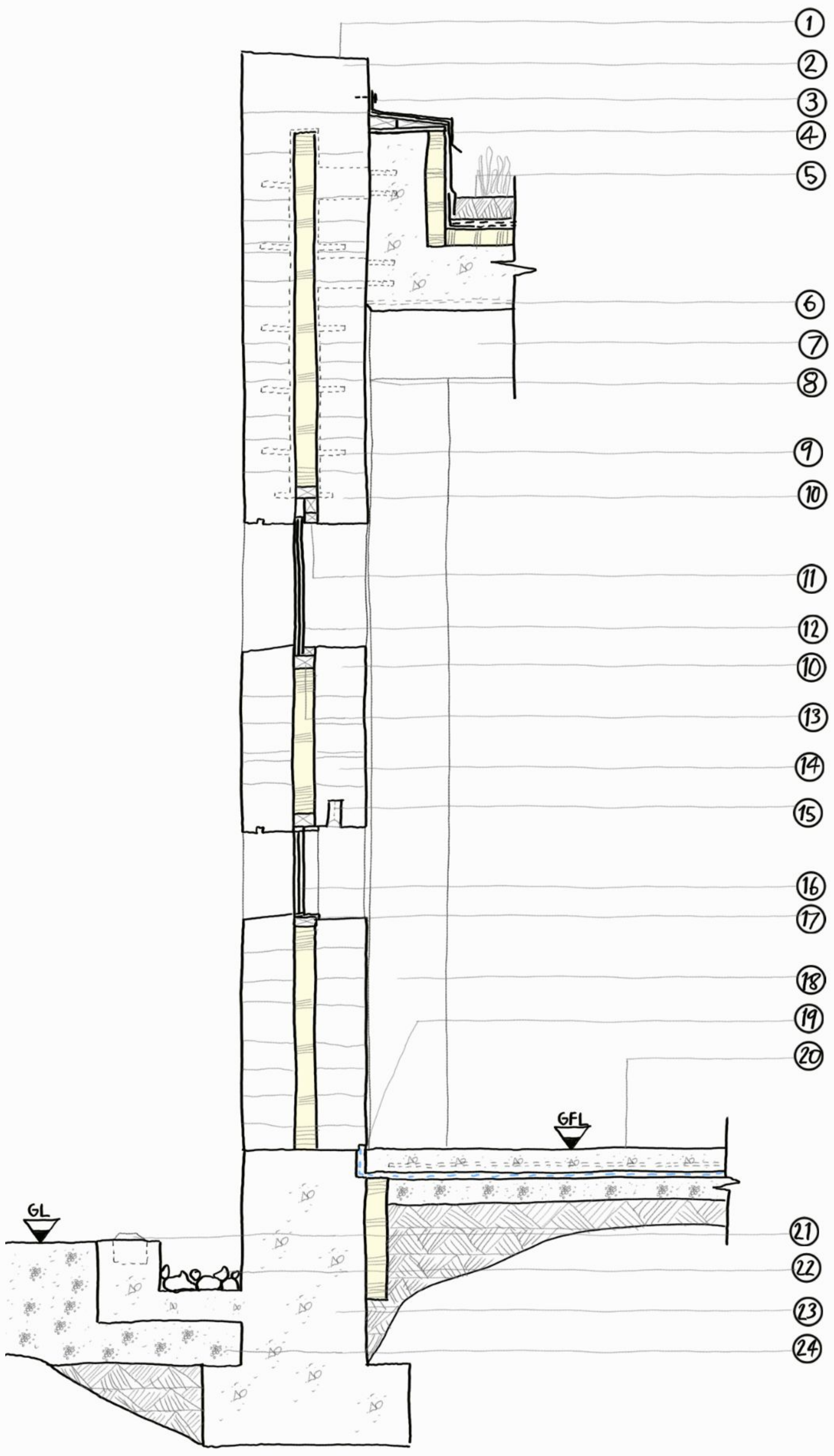

Legend

1 Top coat - cementitious waterstop seale to top of parapet.

2 Puddled earth top lift

3 Saw kerf reglet for continuous membrane flashing and pressure bar - caulk.

4 Prefinished metal flashing.

5 Green roof construction (inverted torch on 2 ply SBS membrane):

- Native plants on
- 230 native soil growing medium on
- Root resistant membrane on
- Drainage panel & filter fabric on
- 100mm rigid insulation (RSI 3.5) on
- Cap sheet on
- Base sheet on
- Primer on
- Sloping suspended concrete with radiant pipes cast in slab.

6 Radiant piping in slab.

7 Concrete slab band (sloping)

8 Reveal.

9 HSS frame inn wall

10 Puddled earth

11 Continuous clear finish ash wood window stop and trim (at window head and cill)

12 Continuous double glazed sealed frameless window - silicone in place.

13 Continuous timber stud (at window head and cill)

14 Wall construction:

- 250mm rammed earth wall - reinforced on
- 100mm PIR insulation on
- 250mm rammed earth wall - reinforced.

Note: Lift heights vary from 125mm to 170mm.

15 Recessed halogen light centred in 76mm dia opening.

16 400 x 400mm double glazed frameless window - silicone in place.

17 Solid ash window stop and trim.

18 Concrete column.

19 Caulk.

20 Floor construction:

- Concrete slab on
- Grade cast with radiant slab heating/cooling pipes on
- Vapour barrier on
- 50 x 610mm rigid insulation around outside perimeter of
- Gravel base on
- Native soil.

21 Recessed in-slab light @ 3200mm centers.

22 Sloping continuous water trough.

23 Concrete strip foundation.

24 Gravel base.

TDS: T5.2 Micro Thesis Developed Investigation

Liam Deguara, C17336913, Year 4 Architectural Technology, Dublin School of Architecture, TU Dublin

24/03/2021

Sheet 5

How can we design homes for extreme climate conditions on Mars?

Mars Proposal - Construction Sequence

Modular Construction

1) Transportation

The machinery, vehicles and modular construction system is transported from Earth to Mars in a dedicated rocket before people set on a mission to Mars.

The crew later go on a rocket to Mars once the rocket holding the supplies payload lands on Mars.

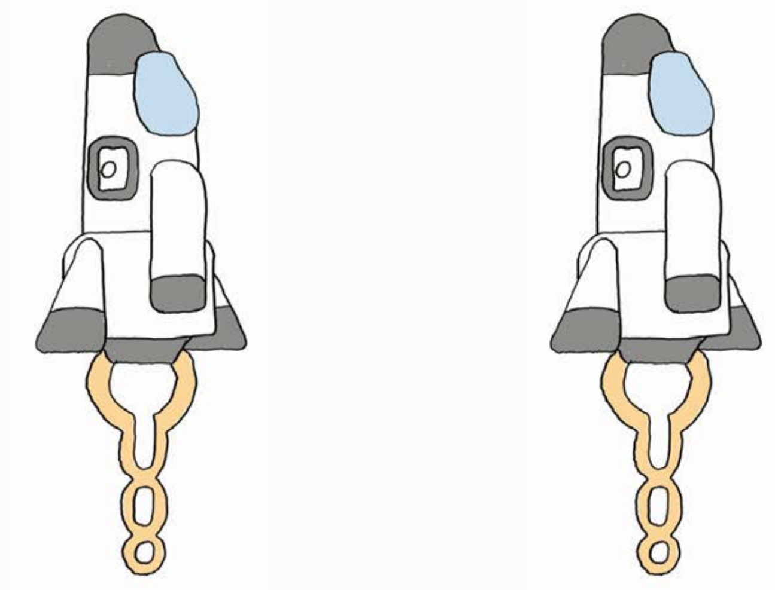

2) Site Selection

Once the mission crew land on Mars, they live in the rocket while the construction of a home is in progress.

A flat site is selected in close proximity to the rockets landing spot that is suitable for excavating.

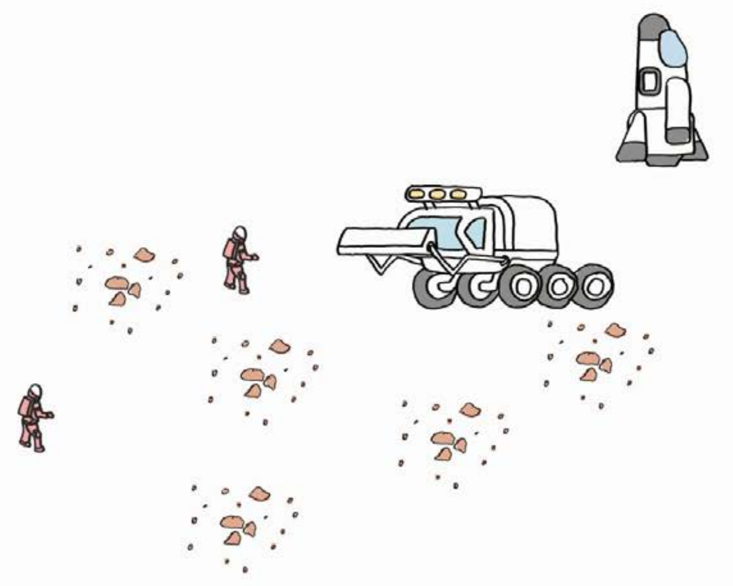

3) Excavation

A rover with excavation apparatus excavates an appropriately sized hole for the basement.

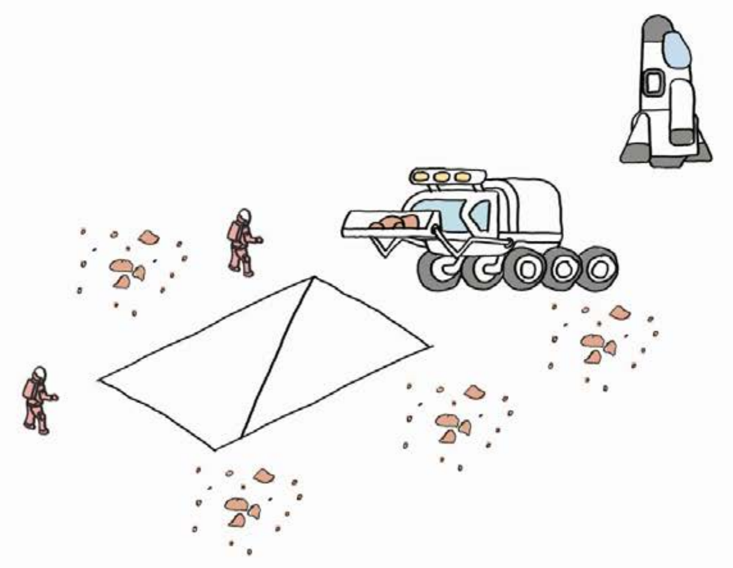

4) Retaining Walls

Insulated retaining wall panels are installed around the perimeter of the basement.

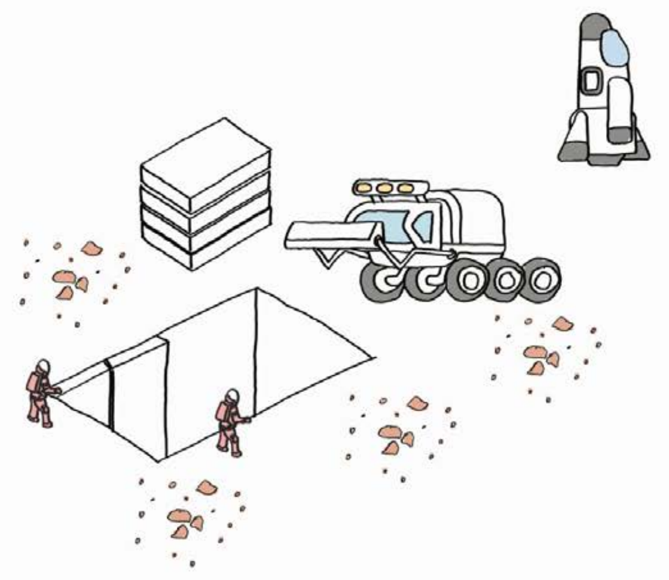

5) Basement Walls

The panels are installed around the perimeter and joints are sealed to create airtightness.

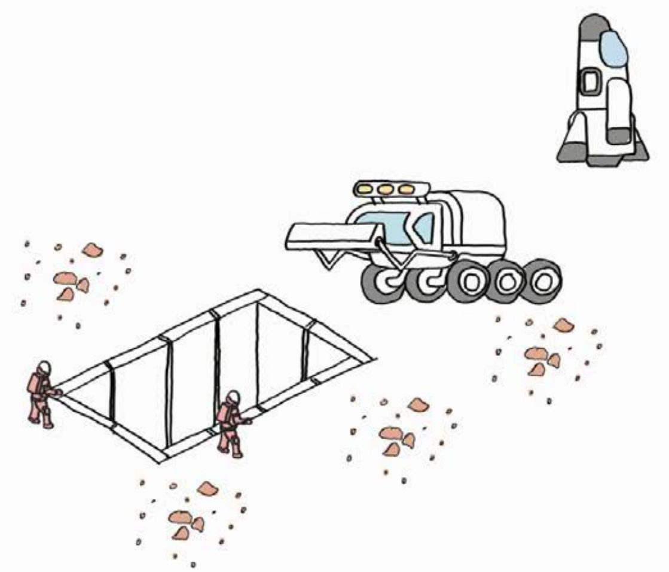

6) Primary Structure

The lightweight primary structure and floor panels are transported to site.

The floor panels are installed over the basement to create a ground floor with an access hatch allowing for a ladder access between the floors.

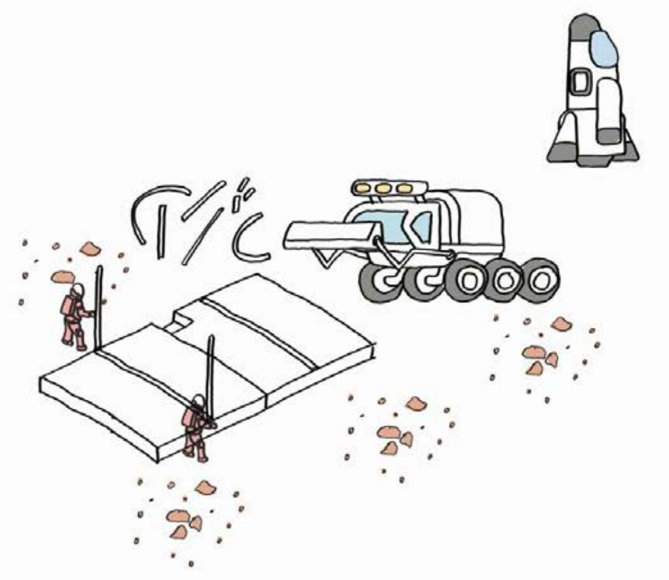

7) Primary Structure

The primary structure is erected ready to host the external wall panels.

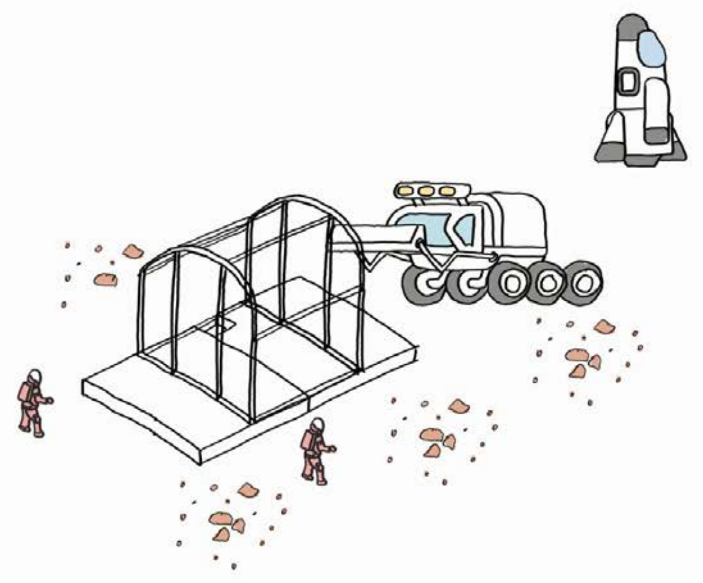

8) External Wall Panels

The insulated wall, roof and window panels are transported to site.

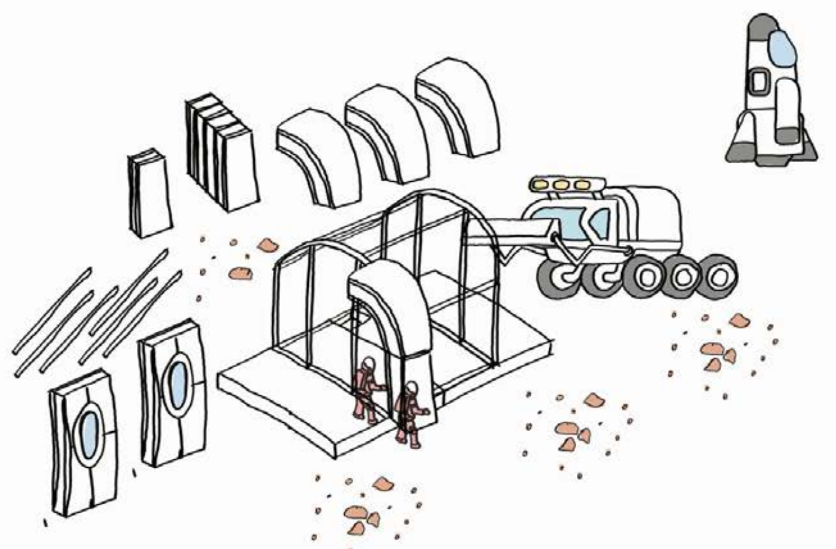

9) External Wall Panels

The panels are installed and are sealed to remain airtight to create a pressurised chamber inside the home that is provided with oxygen.

The external walls protect the inhabitants from radiation providing them with a safe place to live and research.

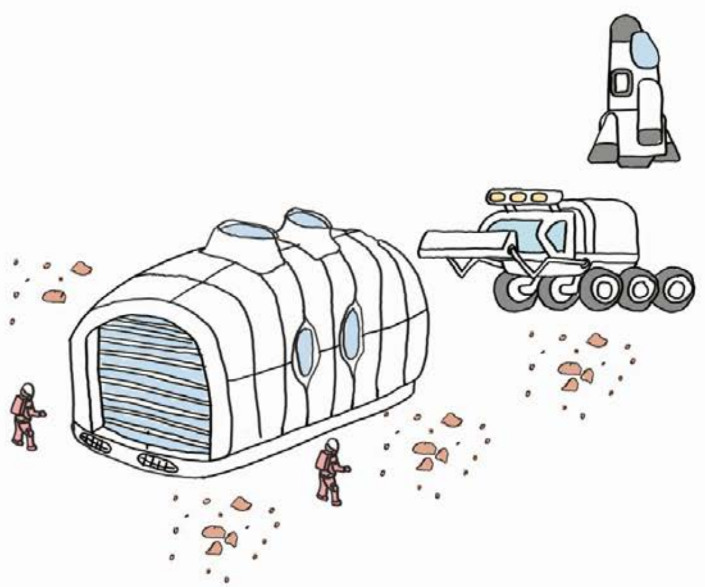

On-Site Materials Construction

1) Transportation

The crew along with minimal supplies, machinery, vehicles and construction materials are the payload of a single rocket destined for Mars.

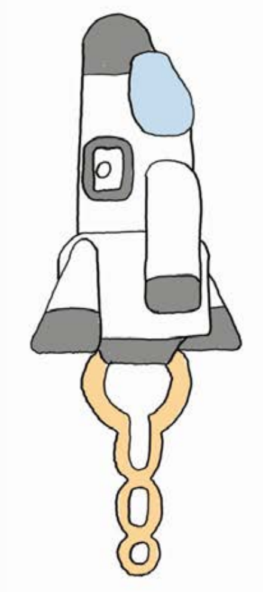

2) Site Selection

Once the mission crew land on Mars, they live in the rocket while the construction of a home is in progress.

A flat site is selected in close proximity to the rockets landing spot that is suitable for excavating.

The site provides enough Martian soil that can be used as the primary construction material.

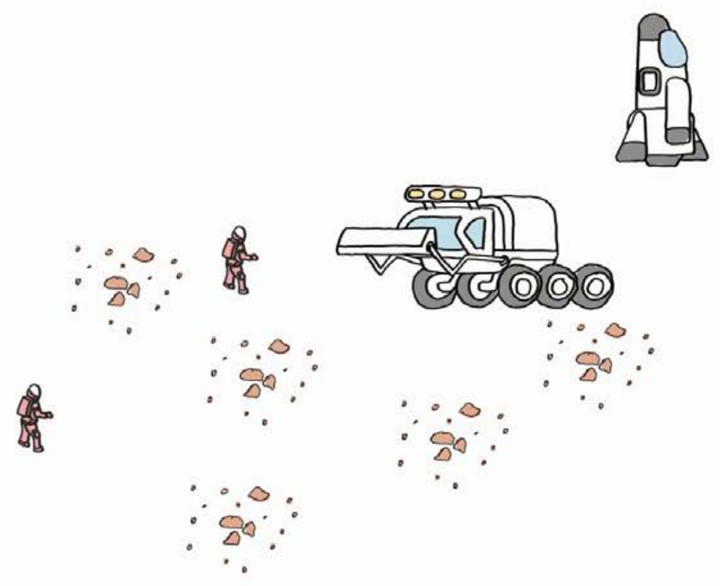

3) Excavation

A rover with excavation apparatus excavates an appropriately sized hole for the basement.

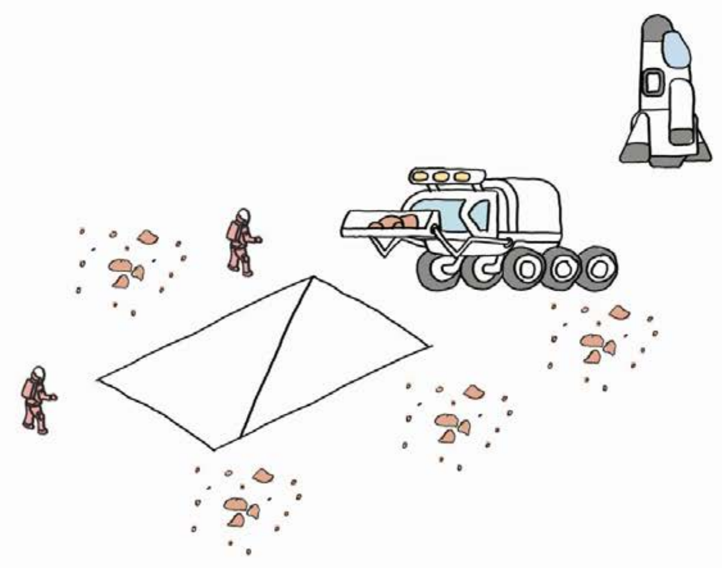

4) Collecting On-Site Material

The excavated materials are collected to be processed into construction materials.

The excavated Martian soil is finely ground, wet, put in a mould under mild compression, dried and baked to create bricks.

Ground Martian soil is mixed with water to create the mortar to bind the bricks together.

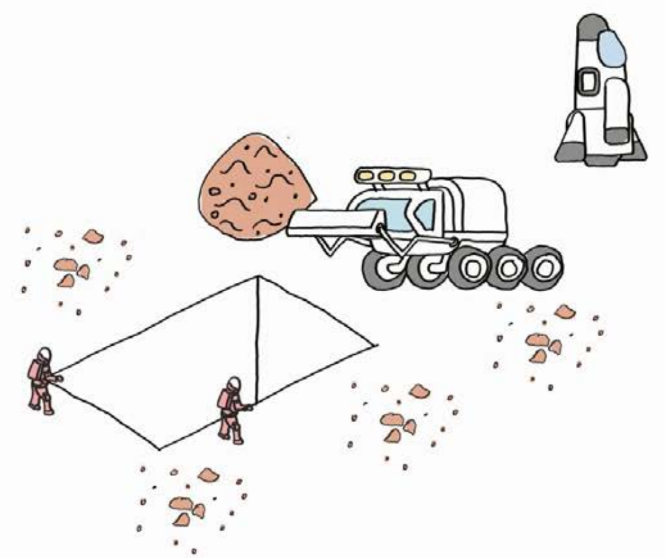

5) Brick Vault Construction

A trench is excavated around the perimeter of the basement walls and a Roman-style vault is constructed using the bricks and mortar.

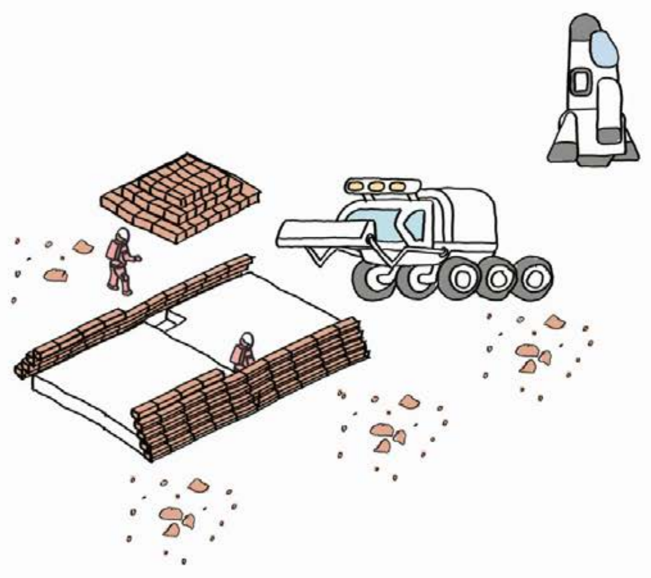

6) Windows & Doors

The brick vault is constructed, installing the windows and doors in the appropriate positions.

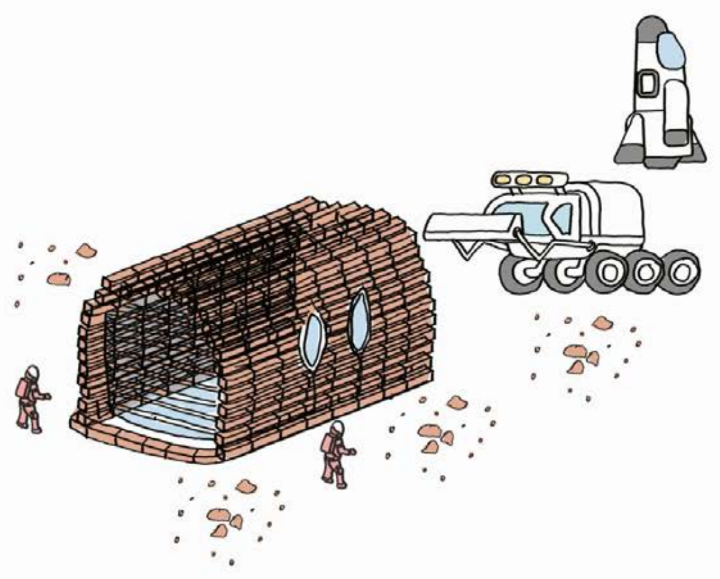

7) Airtight Soil Cover

The brick vault is covered with an additional layer of soil to allow for pressurisation and provide radiation shielding.

The soil also provides thermal insulation.

A thin layer of plastic sealant is sprayed on the walls to prevent air leakage.

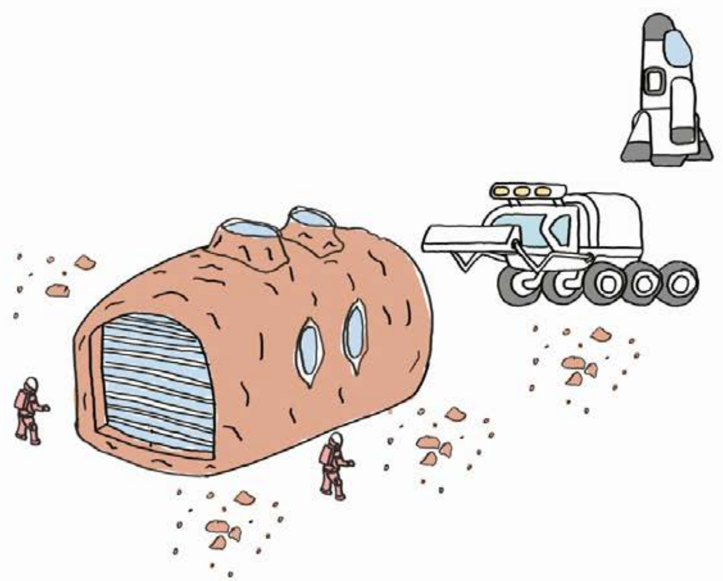

References

Sheet 1

- The Irish Meteorological Service. (n.d). MONTHLY DATA - DUBLIN AIRPORT. Met Eireann. https://www.met.ie/climate/available-data/monthly-data
- British Antarctic Survey. (2021, February 27). Halley 6a weather data. Halley 6a Weather Data. https://legacy.bas.ac.uk/met/momu/weather_display/halley/index.html
- Weather Spark. (n.d). Weather Spark. https://weatherspark.com/
- NASA. (n.d). Mars Weather. MARS InSight Mission. https://mars.nasa.gov/insight/weather/

Sheet 2-4:

- Ruth Slavid, R. S. (2015). Ice Station. Park Books.
- Ruth Slavid, R. S. (2010, July 1). Halley VI Antarctic Research Station by Hugh Broughton Architects, Brunt Ice Shelf, Antarctica. The Architectural Review. https://www.architectural-review.com/places/halley-vi-antarctic-research-station-by-hugh-broughton-architects-brunt-ice-shelf-antarctica

Sheet 5

- ArchDaily. (2014, May 23). Nk'Mip Desert Cultural Centre / DIALOG. https://www.archdaily.com/508294/nk-mip-desert-cultural-centre-dialog?ad_medium=gallery

Sheet 6

- Zubrin, R. Z. (2011). The Case For Mars. Free Press.

TDS: T5.2 Micro Thesis Developed Investigation **24/03/2021**

Liam Deguara, C17336913, Year 4 Architectural Technology, Dublin School of Architecture, TU Dublin **Sheet 6**